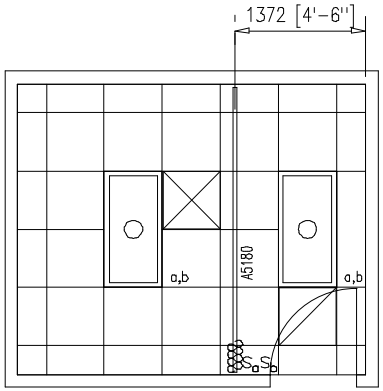

EXAM ROOM, ENT (EXEN1)

AUDIOLOGY/SPEECH PATHOLOGY/ENT

CEILING PLAN 11.15 NSM (120 NSF)

DATE: 01/28/2002

0 1000 2000

1:50 SCALE (MILLIMETERS)