UFC 4-510-01
May 2007

UNIFIED FACILITIES CRITERIA (UFC)

DESIGN: MEDICAL MILITARY FACILITIES

APPROVED FOR PUBLIC RELEASE; DISTRIBUTION UNLIMITED

UNIFIED FACILITIES CRITERIA (UFC)

MEDICAL MILITARY FACILITIES

Any copyrighted material included in this UFC is identified at its point of use.
Use of the copyrighted material apart from this UFC must have the permission of the copyright holder.

TRICARE MANAGEMENT ACTIVITY / PORTFOLIO PLANNING AND MANAGEMENT DIVISION (Preparing Activity)

U.S. ARMY CORPS OF ENGINEERS

NAVAL FACILITIES ENGINEERING COMMAND

AIR FORCE CIVIL ENGINEER SUPPORT AGENCY

Record of Changes (changes are indicated by **1**\ ... /**1**/)

Change No.	**Date**	**Location**
1\	January 2007	Medical Facilities Design Office

This is a republication of Military Handbook 1191 (2002) as a Unified Facilities Criteria document.

FOREWORD

\1\

The Unified Facilities Criteria (UFC) system is prescribed by MIL-STD 3007 and provides planning, design, construction, sustainment, restoration, and modernization criteria, and applies to the Military Departments, the Defense Agencies, and the DoD Field Activities in accordance with USD(AT&L) Memorandum dated 29 May 2002. UFC will be used for all DoD projects and work for other customers where appropriate. All construction outside of the United States is also governed by Status of forces Agreements (SOFA), Host Nation Funded Construction Agreements (HNFA), and in some instances, Bilateral Infrastructure Agreements (BIA.) Therefore, the acquisition team must ensure compliance with the more stringent of the UFC, the SOFA, the HNFA, and the BIA, as applicable.

UFC are living documents and will be periodically reviewed, updated, and made available to users as part of the Services' responsibility for providing technical criteria for military construction. Headquarters, U.S. Army Corps of Engineers (HQUSACE), Naval Facilities Engineering Command (NAVFAC), and Air Force Civil Engineer Support Agency (AFCESA) are responsible for administration of the UFC system. Defense agencies should contact the preparing service for document interpretation and improvements. Technical content of UFC is the responsibility of the cognizant DoD working group. Recommended changes with supporting rationale should be sent to the respective service proponent office by the following electronic form: Criteria Change Request (CCR). The form is also accessible from the Internet sites listed below.

UFC are effective upon issuance and are distributed only in electronic media from the following source:

- Whole Building Design Guide web site http://dod.wbdg.org/.

Hard copies of UFC printed from electronic media should be checked against the current electronic version prior to use to ensure that they are current.

AUTHORIZED BY:

JAMES C. DALTON, P.E.
Chief, Engineering and Construction
U.S. Army Corps of Engineers

JOSEPH E. GOTT, P.E.
Acting Chief Engineer
Naval Facilities Engineering Command

KATHLEEN I. FERGUSON, P.E.
The Deputy Civil Engineer
DCS/Installations & Logistics
Department of the Air Force

Dr. GET W. MOY, P.E.
Director, Installations Requirements and Management
Office of the Deputy Under Secretary of Defense (Installations and Environment)

UFC 4-510-01
May 2007

UNIFIED FACILITIES CRITERIA (UFC)

DEPARTMENT OF DEFENSE
MEDICAL MILTARY FACILITIES
DESIGN AND CONSTRUCTION CRITERIA

ABSTRACT

This UFC provides mandatory design and construction criteria for facilities in the DoD Medical Military Construction Program. This criteria is also applicable to military medical facilities funded by other programs, under limitations discussed in Section 1. Service-specific criteria may augment this UFC, but requirements that exceed this guidance must be fully justified to ensure understanding by the reviewing officials.

For MILCON projects, the procedures outlined in this UFC apply from the time the Design Authorization (DA) is issued by the Portfolio Planning and Management Division (PPMD) and throughout the design, construction, Beneficial Occupancy, and the Post-Occupancy Evaluation (POE) period.

While these criteria were not developed primarily for use in review of military construction program and budget submissions, it is recognized they may be used for that purpose. Projects should not, however, be approved, disapproved, or justified solely on the basis of these criteria.

This document is not intended to be the basis of design for Operations and Maintenance (O&M) or Repair and Maintenance (R&M) work though it may serve as a guide in the absence of other relevant criteria.

FORWARD

This UFC is issued under the authority of DoD Directive 6015.17, “Procedures for the Planning, Programming, Budgeting, and Execution for Construction of Military Health Facilities”, dated April 15, 1986, which gave the Portfolio Planning and Management Division (TMA/PPMD) the authority to develop and maintain the facilities planning, design, and construction criteria in support of the missions of the Military Health Services System.

This UFC applies to the Office of the Secretary of Defense (OSD), the Military Departments, the Organization of the joint Chiefs of Staff (OJCS), the Unified and Specified Commands, the Defense Agencies, and activities administratively supported by OSD (hereafter referred to collectively as “DoD Components”). This UFC covers criteria unique to Category Code 171, 310, and 500 facilities only and shall be used in conjunction with the MIL-HDBK-1190, “Facility Planning and Design Guide”, for general building requirements.

The Tricare Management Activity / Portfolio Planning and Management Division (TMA/PPMD), 5205 Leesburg Pike, Suite 100, Skyline 1, Falls Church, VA 22041-3208, is the Office of Primary Responsibility (OPR) for approval of this UFC. The U.S. Army Corps of Engineers’ Medical Facilities Mandatory Center of Expertise and Standardization is the Executive Agent responsible for maintenance of the UFC. Recommendations for improvement to this UFC are encouraged and should be reported on the DoD Form 1426 provided inside the back cover to the U.S. Army Corps of Engineers, CEHNC-MX, Humphreys Engineer Center, 7701 Telegraph Road, Room 2A-16, Alexandria, VA 22315-3813, with information copy to TMA/PPMD. The using Military Departments and the Design and Construction Agents may submit proposed changes to this UFC through the TMA/PPMD as provided at Section 1 of this UFC.

This UFC shall not be used as a reference document for procurement of facilities construction. It is to be used in the purchase of facilities engineering studies and design (plans, specifications, and cost estimates).

The purpose of this UFC is to standardize and simplify the design of healthcare facility process by concisely stating which design criteria is to be used.

CONTENTS

Page

SECTION 1 GENERAL GUIDANCE

Paragraph	1-1	GENERAL	1-1
	1-2	APPLICABILITY	1-1
	1-3	POLICY	1-1
	1-4	RESPONSIBILITIES	1-2
	1-5	REFERENCED DOCUMENTS	1-3
	1-6	PREDESIGN CONSIDERATIONS.	1-3
	1-7	DESIGN CONSIDERATIONS	1-5
	1-8	IMPROVEMENT / ALTERATION OF EXISTING FACILITIES	1-6
	1-9	TYPES OF CONSTRUCTION	1-10
	1-10	TOTAL BUILDING COMMISSIONING	1-10
	1-11	PARKING FACILITIES	1-11

SECTION 2 DESIGN PROCEDURE, SUBMITTALS, AND DOCUMENTATION

Paragraph	2-1	GENERAL	2-1
	2-2	DESIGN GOALS	2-1
	2-3	DESIGN SEQUENCE AND RESPONSIBILITIES	2-1
	2-4	REPORTING REQUIREMENTS	2-4
	2-5	DESIGN-BUILD PROJECTS	2-4
	2-6	DESIGN SUBMITTALS AND DOCUMENTATION REQUIREMENTS	2-4
	2-7	DESIGN REVIEW POLICY	2-5
	2-8	DESIGN MANAGEMENT PLAN	2-5
	2-9	CONSTRUCTION COST ESTIMATES	2-5
	2-10	FINAL DESIGN (100 PERCENT)	2-5

SECTION 3 ARCHITECTURAL

Paragraph	3-1	GENERAL	3-1
	3-2	EXTERNAL DESIGN.	3-1
	3-3	EXTERIOR WALL DESIGN	3-1
	3-4	FENESTRATION AND WINDOWS	3-1
	3-5	INTERIOR CONSTRUCTION	3-1
	3-6	FLOORS	3-2
	3-7	WALL AND PARTITION SYSTEMS	3-2
	3-8	CEILINGS	3-3
	3-9	VESTIBULES AND DOORS	3-3
	3-10	SUSTAINABLE DESIGN	3-3

SECTION 4 STRUCTURAL DESIGN

Paragraph 4-1 GENERAL 4-1
4-2 DESIGN CRITERIA 4-1
4-3 DESIGN LOADINGS 4-1
4-4 SITE CONDITIONS & SOILS INVESTIGATIONS 4-2
4-5 ADDITIONAL DESIGN CONSIDERATIONS 4-2

SECTION 5 SEISMIC DESIGN

Paragraph 5-1 INTRODUCTION 5-1
5-2 HEALTH CARE AND DESIGN REQUIREMENTS 5-1
5-3 SEISMIC PERFORMANCE LEVELS 5-1
5-4 POST-EARTHQUAKE EMERGENCY STATUS 5-2
5-5 CONCEPT DESIGN DEVELOPMENT 5-2
5-6 EVALUATION OF EXISTING FACILITIES 5-3
5-7 DESIGN OF NON-STRUCTURAL SYSTEMS 5-4

SECTION 6 ENERGY AND WATER CONSCIOUS DESIGN

Paragraph 6-1 GENERAL 6-1

SECTION 7 HEATING, VENTILATION, AND AIR CONDITIONING (HVAC)

Paragraph 7-1 GENERAL 7-1
7-2 DESIGN CONDITIONS 7-1
7-3 REFRIGERANTS 7-3
7-4 LIFE-CYCLE-COST/ENERGY ANALYSIS 7-3
7-5 ELIGIBILITY FOR AIR CONDITIONING 7-3
7-6 MECHANICAL EQUIPMENT SPACE. 7-4
7-7 HVAC SYSTEM DESIGN FOR FUNCTIONAL AREAS. 7-5
7-8 GENERAL DESIGN CONSIDERATIONS 7-7
7-9 HVAC SYSTEM CONTROLS 7-11
7-10 STEAM SYSTEMS 7-13
7-11 AIR HANDLING AND DISTRIBUTION 7-14
7-12 MAINTENANCE PROVISIONS. 7-16
7-13 VIBRATION CONTROL 7-17
7-14 INTERDISCIPLINARY COORDINATION 7-17
7-15 FUEL STORAGE REQUIREMENTS 7-19
7-16 VENTILATION DESIGN. 7-19
7-17 PATIENT ISOLATION ROOM DESIGN 7-23

SECTION 8 PLUMBING AND MEDICAL GASES

Paragraph 8-1 GENERAL 8-1
8-2 POTABLE WATER SUPPLY SYSTEM 8-2
8-3 SANITARY DRAINAGE SYSTEM 8-10
8-4 STORM WATER DISPOSAL 8-11
8-5 FUEL GAS SERVICE 8-12
8-6 MEDICAL GAS SYSTEMS. 8-12

SECTION 9 ELECTRICAL

Paragraph 9-1 GENERAL 9-1
9-2 EXTERIOR ELECTRICAL 9-4
9-3 ALTERNATE POWER SOURCE 9-6
9-4 INTERIOR ELECTRICAL SYSTEMS 9-15
9-5 LIGHTING 9-21
9-6 LIGHTNING PROTECTION 9-25

SECTION 10 COMMUNICATIONS

Paragraph 10-1 INTRODUCTION 10-1
10-2 COMMUNICATIONS SYSTEMS ACQUISITION 10-1
10-3 PLANNING, DESIGN, AND CONSTRUCTION RESPONSIBILITIES 10-1
10-4 COMMUNICATION DISTRIBUTION FACILITIES 10-1
10-5 TELEPHONE SYSTEM REQUIREMENTS 10-3
10-6 TELECOMMUNICATIONS INFRASTRUCTURE SYSTEM (TIS). 10-8
10-7 DEDICATED INTERCOM SYSTEM 10-9
10-8 ENTERTAINMENT AND EDUCATIONAL TELEVISION (TV) SYSTEM 10-9
10-9 RADIO FREQUENCY DISTRIBUTION SYSTEM 10-11
10-10 NURSE CALL TONE VISUAL (NCTV) 10-11
10-11 NURSE CALL AUDIOVISUAL(NCAV) SYSTEMS 10-12
10-12 PUBLIC ADDRESS (PA) AND PROGRAM DISTRIBUTION SYSTEM. 10-20
10-13 RADIO PAGING SYSTEMS 10-22
10-14 EMERGENCY MEDICAL SERVICE (EMS) COMMUNICATIONS 10-23
10-15 PHYSIOLOGICAL MONITORING 10-23
10-16 SPECIAL MONITORING EQUIPMENT. 10-24
10-17 ELECTRONIC SECURITY SYSTEMS 10-25
10-18 EMS RECORDER SYSTEM 10-26

SECTION 11 ACCESSIBILITY PROVISIONS FOR THE DISABLED

Paragraph 11-1 GENERAL 11-1
11-2 MILITARY EXCLUSIONS 11-1
11-3 OVERSEAS FACILITIES 11-1
11-4 TMA/PPMD COMPLIANCE REQUIREMENT 11-1
11-5 VISUAL ALARMS 11-1

SECTION 12 FIRE PROTECTION

Paragraph 12-1 GENERAL 12-1
12-2 CRITERIA 12-1
12-3 BUILDING CONSTRUCTION 12-1
12-4 OCCUPANCY CLASSIFICATION 12-3
12-5 MEANS OF EGRESS 12-3
12-6 INTERIOR FINISHES. 12-3
12-7 FIRE DETECTION AND ALARM SYSTEMS (FDAS) 12-4
12-8 SMOKE CONTROL SYSTEMS 12-5
12-9 AUTOMATIC SPRINKLER PROTECTION 12-5
12-10 STANDPIPES 12-7
12-11 ELECTRONIC COMMUNICATIONS AND AUTOMATIC DATA PROCESSING (ADP) INSTALLATIONS 12-7
12-12 ATRIUMS/MALLS. 12-7
12-13 PROTECTION FROM HAZARDS 12-7
12-14 INTEGRATED BUILDING SYSTEMS (IBS) 12-8

SECTION 13 PHYSICAL SECURITY

Paragraph 13-1 GENERAL 13-1
13-2 DESIGN CRITERIA 13-1
13-3 ELECTRONIC SECURITY SYSTEMS 13-1
13-4 KEYS AND LOCKS 13-1
13-5 LEVELS OF SECURITY PROTECTION 13-1
13-6 SPECIAL CONSIDERATIONS FOR SECURITY SENSITIVE AREAS/ROOMS. 13-2

SECTION 14 ANTITERROISM FORCE PROTECTION

Paragraph 14-1 GENERAL 14-1
14-2 SECTION 13: PHYSICAL SECURITY 14-1

SECTION 15 MEDICAL AND DENTAL EQUIPMENT

Paragraph 15-1 GENERAL 15-1
15-2 PROCUREMENT 15-1
15-3 DESIGN 15-2
15-4 FOOD SERVICE EQUIPMENT 15-2
15-5 HIGH TECHNOLOGY EQUIPMENT 15-2
15-6 HYPERBARIC CHAMBERS 15-3

SECTION 16 TRANSPORATION AND MATERIALS HANDLING SYSTEMS

Paragraph 16-1 GENERAL 16-1
16-2 TRAFFIC SEPARATION AND CIRCULATION 16-2
16-3 ELEVATOR AND ESCALATOR PLANNING FACTORS 16-3
16-4 ELEVATOR PERFORMANCE CRITERIA 16-5
16-5 ELEVATOR DESIGN CONSIDERATIONS 16-7
16-6 SYSTEMS DESIGN. 16-10
16-7 TRAFFIC DATA 16-10
16-8 PASSENGER AND HOSPITAL SERVICE

ELEVATOR FEATURES 16-12
16-9 MATERIALS HANDLING AND MANAGEMENT SYSTEMS CONSIDERATIONS 16-14

SECTION 17 WASTE MANAGEMENT
Paragraph 17-1 INTRODUCTION 17-1

SECTION 18 CONSTRUCTION
Paragraph 18-1 GENERAL 18-1
18-2 ADVERTISING 18-1
18-3 CONTRACT AWARD 18-1
18-4 CONSTRUCTION CHANGE ORDERS 18-1
18-5 CONSTRUCTION FUNDS 18-2
18-6 INSTALLED EQUIPMENT (CATEGORY E AND F) 18-2
18-7 CONTRACTOR CLAIMS 18-2
18-8 MILCON FUNDS STATUS REPORT 18-2
18-9 POST-OCCUPANCY EVALUATION (POE) 18-3
18-10 JCAHO STATEMENT OF CONDITIONS 18-3

SECTION 19 WAYFINDING AND SIGNAGE
Paragraph 19-1 GENERAL 19-1
19-2 EXTERIOR SIGNS 19-1
19-3 INTERIOR SIGNAGE 19-1
19-4 SIGN MAKING EQUIPMENT 19-2
19-5 EXISTING CONSTRUCTION 19-2

APPENDIX A ARCHITECTURAL AND ENGINEERING DESIGN REQUIREMENTS Legend and Notes ..... Apdx A-1

APPENDIX B DESIGN SUBMITTALS AND DOCUMENTATION FOR DBB ACQUISITION PROCESS ..... Apdx B-1

APPENDIX C UNIVERSAL X-RAY ROOM ..... Apdx C-1

APPENDIX D UFAS INTERPRETATIONS AND WAIVERS ..... Apdx D-1

APPENDIX E INTEGRATION OF BUILDING SYSTEMS ..... Apdx E-1

APPENDIX F FOOD SERVICE ..... Apdx F-1

GLOSSARY GLOSSARY OF TERMS, ABBREVIATIONS, AND ACRONYMS GLOS-1

FIGURES

Figure	Title	
1-1	Site Checklist	1-15
1-2	Logistical Responsibility for Building Systems	1-18
1-3	Checklist for Medical Facility Upgrade Surveys	1-21
2-1	DoD Medical Military Construction Timetable for Planning, Budgeting, & Execution of a "Typical" MILCON Project in the FY XX Program	2-2
2-2	Instructions for Preparing Gross Area Tabulation	2-7
2-3	Net to Gross Square Meter (GSM)[1] Calculations	2-10
9-1	Hospital Oneline Diagram	9-5
9-2	Hospital Helipad Day Marking	9-29
9-3	Hospital Helipad Lighting Pattern	9-30
9-4	Hospital Helipad Lighting Control Diagram	9-31
9-5	Multi-Ended Network Substation System Diagram	9-36
9-6	Multi-Ended Network Substation and Emergency Power System Diagram	9-37
12-1	Integrated Building Systems Typical Two Floor Section – Fire Resistance	12-11
16-1	Elevator Traffic Separation Guide	16-19
16-2	Average Interval Performance Standards 5 Minutes of Heavy 2-Way Traffic Typical Facility	16-20
16-3	Passenger Handling Capacity 5 Minutes of Heavy 2-Way Traffic Typical Facility	16-20
16-4	Average Maximum Ride Time	16-21
16-5	Elevator Types and Speeds	16-21
16-6	Service Cars – In Line	16-22
16-7	Passenger Cars – In Line	16-22
16-8	Adjacent Entrances – In Line	16-23
16-9	Adjacent Entrances – 180 Degrees (Opposing)	16-23
16-10	Elevator with Lobby Alcove	16-24
16-11	Elevator with Lobby Setback	16-24
16-12	Passenger Elevator – (Non Seismic)	16-25
16-13	Hospital Service/Passenger Elevator with Center Opening Doors (Non Seismic)	16-26
16-14	Hospital Service Elevator Two Speed Side Opening Doors (Non Seismic)	16-27
16-15	Hospital Combination Passenger and Service Elevator Center Opening Doors, Front and Rear (Non Seismic)	16-28
16-16	Hospital Combination Passenger and Service Elevator Center Opening Doors, Front and Rear (Non Seismic)	16-29
16-17	Materials Handling System Alternative Matrix	16-30

TABLES

Table	Title	
1-1	Required Parking Spaces for Medical and Dental Treatment Facilities	1-13
5-1	Nonstructural Systems	5-6
8-1	Potential Backflow Preventer Discharge Rates	8-4
8-2	Floor Drain Flow Rates	8-4
8-3	Hot Water Demand per Fixture for MTF's	8-8
8-4	Medical Gas Systems	8-12
8-5	Medical Compressed Air System Demand	8-17
8-6	Receiver Size	8-20
8-7	Medical Laboratory Air System Demand	8-21
8-8	Not used	
8-9	DHV Demand Factors	8-23
8-10	Demand Flow Rate Increase	8-24
8-11	Seperator Tank Sizing	8-24
8-12	LDE System Utilization Factors	8-26
8-13	Oxygen System Utilization Factors	8-28
8-14	Cylinder Manifold Systems	8-28
8-15	Oxygen Bulk Tank Sizes	8-29
8-16	Nitrous Oxide System Utilization Factors	8-30
8-17	Nitrous Oxide System Manifold Sizing	8-30
8-18	Manifold Sizing for Nitrogen System	8-31
8-19	Process Gas Utilization Factors	8-32
9-1	Applicable References	9-25
9-2	Continuous and Emergency Rated Diesel-Electric Generator Sets for Medical Facilities	9-7
9-3	Hospital Helipad Lighting Requirements.	9-32
9-4	Sample Nonlinear Load Analysis Matrix.	9-33
10-1	Emergency Power Branch Assignment for Communication Systems	10-29
10-2	Critical Care Areas that Require Executive Bridging Feature	10-29
10-3	Public Address and Program Distribution Zones	10-30

SECTION 1

GENERAL GUIDANCE

1-1 **GENERAL**. This section provides general guidance on Department of Defense (DoD) policies and procedures for design and construction of Defense Medical Facilities, including medical and dental treatment facilities (MTF's), medical training facilities, medical research facilities, and veterinary treatment facilities in the Defense Medical Program. When feasible, this document is also to be utilized as criteria in the addition, alteration, or service upgrade to existing U.S. Military medical facilities funded by military departmental programs. Subject to the restrictions provided herein, applicability shall be limited only to those portions of such facilities, and/or the corresponding support services, specifically referenced by the project authorization document. It is the DoD objective to provide facilities that are responsive to the functional requirements of the using Military Department.

1-2 **APPLICABILITY**. This document sets forth DoD policy, procedures, and technical criteria for the design and construction of facilities in the Department of Defense Medical (DoDM) Military Construction (MILCON) program, and other medical design and construction projects over the UMC (Unspecified Minor Construction) threshold. When considered-feasible and economical by the services, the technical criteria in this document shall be the basis of design for Operations and Maintenance (O&M) or Repair and Maintenance (R&M) work, though the specific submittal and approval requirements may vary for those types of projects. In overseas locations where either Status of Forces Agreements (SOFA), local host country codes and standards, or other local circumstances may conflict with the criteria in this UFC, alternate design approaches shall be developed to achieve the intent of the criteria without compromising life safety or the safeguarding of persons and property. Conflicts shall be resolved at the Design Agent level, when the Design Agent's medical facilities design office or center of expertise determines that resolution does not represent a significant change to criteria affecting building occupant safety or health. All other proposed changes shall be coordinated through the Design Agent's medical office or center for submission to the Tricare Management Activity (TMA)

1-3 **POLICY**. As stated in the DoD Directive 6015.17 (reference 1j), it is DoD policy to design efficient, economical, and safe facilities, which sustain an effective combat force, that support the DoD medical wartime mission, and that meet the provisions of Title 10, United States Code (reference 1a). This document prescribes the DoD technical criteria and policy guidance for the design and construction of safe, functional, and durable facilities, which will have reasonable and appropriate maintenance and operations costs throughout their designed life. Detailed design criteria and procedures, which may be developed and issued by the DoD Components (Military Departments), shall be consistent with the policy statements and criteria contained herein and shall not deviate from these criteria without TMA/PPMD approval, as provided at 1-4.3. Facility designs shall:

1-3.1 meet the operating requirements of the using activity and provide reasonable flexibility to accommodate future changes.

1-3.2 provide functional facilities at the most economical and practicable life-cycle-cost.

1-3.3 be aesthetically compatible with the local environs and meet necessary environmental requirements including applicable federal, state, and local environmental standards and criteria. Necessary coordination shall be maintained with the state and local community in accordance with the requirements of E.O. 12372 (reference 1c).

1-4 **RESPONSIBILITIES**. The Office of the Assistant Secretary of Defense (Health Affairs), OASD(HA), Tricare Management Activity (TMA), Portfolio Planning and Management Division (PPMD) is responsible for the acquisition of all healthcare facilities worldwide including development and issuance of medical facility policy, planning, programming, budgeting, design and construction of all projects. TMA/PPMD is responsible for the development, issuance and maintenance of healthcare facilities planning and technical criteria and management of financial resources for all planning, design and construction of projects. TMA/PPMD is also responsible for the review of concept level designs described in Section 02 of this document, and to certify these designs in accordance with DoD Directives 5136.12 and 6015.17 (references 1d and 1j). The Design and Construction Agents may maintain supplementary technical criteria and will execute design and construction following established regulations and procedures unless otherwise directed by the TMA/PPMD. Design Agents will produce designs for a complete and useable facility within the approved programmed scope and programmed amount. The Military Departments, as the users, are responsible for all medical functional review and input during design. The Functional User's and the Service's Design Agent's responsibilities often overlap but do not supersede the respective medical and technical role of the other; the design of each facility must be a collaborative partnership. Specific responsibilities are addressed in various sections of this UFC.

1-4.1 **Responsible Office**. The Office of the Assistant Secretary of Defense (Health Affairs), OASD(HA), TMA/ PPMD is responsible for the general administrative management of this entire document, and has responsibility for the contents and development of criteria in collaboration with TMA/PPMD (See below).

1-4.2 **Healthcare Facilities Steering Committee (HFSC)**. The HFSC acts as the clearance body for the technical contents of this document. This Committee is composed of members of TMA, the using Military Departments, and the Services design agents actively involved in the planning, programming, design, and construction of facilities. All proposed UFC-4-510-01 criteria updates and changes may be formally submitted to the Committee for evaluation. DD Form 1426 is provided for this purpose at the end of this UFC-4-510-01.

1-4.3 **Waivers**. TMA/ PPMD has the final authority to waive UFC-4-510-01 policy, procedures, or criteria including any deviations. Requests for project specific waivers to any portion of this document must be submitted in writing by the Design Agent, with full particulars and justification, and must be fully coordinated with the using Military Department.

1-4.4 **Design/Construction Agents**. Title 10, Section 2851 and DoD Directive 4270.5 assigns Design/Construction Agents, for certain geographical locations, responsibility for the execution of projects from receipt of a Design Authorization from TMA/PPMD through the completion of construction.

Design/Construction Agents are:

a. The U. S. Army Corps of Engineers (USACE). The Headquarters, USACE, Defense Agencies and Support For Others Branch (CEMP-MD) is the primary USACE point of contact with TMA and is responsible for all program management issues. The USACE Medical Facilities Mandatory Center of Expertise and Standardization, Huntsville Engineering and Support Center (CEHNC-MX) is USACE's technical expert for medical design, with responsibility for concept design oversight, medical technical review of final designs, and medical design guidance, criteria, and standards.

b. The Naval Facilities Engineering Command (NAVFAC). The NAVFAC Medical Facilities Design Office (MFDO) is the Navy's point of contact with TMA and technical expert for medical design and NAVFAC's final decision making authority regarding technical guidance, criteria, and standards on all medical projects from initiation of project to beneficial occupancy of the building.

c. The Air Force Civil Engineers (AF/A7CC). Air Force Civil Engineering Construction and Engineering Division is the primary point of contact with TMA in the United Kingdom.

1-5 **REFERENCED DOCUMENTS**. The DoD Directives, Instructions, and selected technical data, publications and standards (latest or most current editions) are referenced in the text by basic designation only and form a part of these criteria to the extent required by these references. Where references are made to MIL-HDBK-1190 (reference 1e), those referenced sections shall become an integral portion of this guidance.

1-6 **PREDESIGN CONSIDERATIONS**. Using Service shall fund and, in coordination with TMA/PPMD, prepare a Project Planning Package prior to the start of design. This package shall include the following documents and information, provided to TMA/PPMD by the Using Service in accordance with the DoD Medical Military Construction Timeline, Figure 2-1:

1-6.1 **DD Form 1391**. Describes the scope, cost, type of construction and rationale for the project.

1-6.2 **Project Narrative**. Summarizes the sizing decision process, siting, construction scenario, significant planning information and results.

1-6.3 **Economic Analysis (EA)**. The Using Service will provide an economic analysis as supporting justification of DOD medical projects with a cost over $2 million

as required by DoD Instruction 7041.3 and in accordance with guidance developed by TMA/PPMD. The Economic Analysis compares mission-based alternatives and identifies the most cost-effective capital investment.

1-6.4 **Program for Design (PFD**). Use the TMA/PPMD approved Program for Design (PFD) to allocate space assigned to a proposed facility. Modifications must be approved by TMA/PPMD. Include the estimated number of parking spaces as part of the Space Program.

1-6.5 **Equipment Planning**. The Using Service is responsible for preparing an equipment list for installed medical and dental equipment, and the associated budgeting, to support this requirement (MILCON) based on the Space and Equipment Planning System (SEPS). Equipment in Logistical category Codes E and F may be altered by the using Military Department if funding source requirements are not exceeded. Any increase in the funding for category Codes E and F equipment over the programmed amount of the project requires TMA/PPMD approval.

1-6.6 **Project Book (PB)**. The PB summarizes existing site conditions and utilities, including the following minimum information.

a. Completed site survey (Example format is provided in Figure 1-1), area maps, location maps, site location, site description (to include grades, gates, etc), style of architecture, construction season limitations, seismic, wind and snow considerations, SOFA, host country agreements, soil and foundation conditions, utility conditions (water, sewer, power, steam, electrical capacities and location), and site restrictions (airfield, AICUZ potential helipad approach/departure zone obstructions, floodland, rights-of-way, etc.), site security restrictions, the National Capital Planning Commission (NCPC).

b. Utility availability, including water, sewage, storm drainage, electrical power, existing fuel sources, central heat or chilled water systems, including the tap-in locations. Also include the available capacities, power service characteristics and locations, electrical distribution, water and wastewater considerations.

c. Environmental impact requirements, archaeological and historical considerations, explosive ordinance locations, contaminated soil (fuel, asbestos, etc.), coastal zone considerations, wetlands and watershed considerations, threatened and endangered species considerations, water quality, air quality, asbestos contamination, protection of natural resources information, and any other Environmental Protection Agency (EPA) or Occupational Safety and Health Administration (OSHA) considerations necessary which might impact the MILCON project.

d. Force Protection/Security requirements including contingency considerations and statement by installation commander of designee identifying appropriate threat security level wherever minimal requirements are exceeded.

e. Contingency mode concept of operation where applicable.

f. Fire protection considerations, such as accessibility and water supply.

g. Communications Information or data systems, telephone and signal interface requirements for fire, police, etc., telephone switch capacities and line availability for MILCON project, Energy and Utility Monitoring and Control System (EMCS, UMCS) interface, master antenna, cable TV and closed circuit availability, computer interface, telecommunications and all other similar or useful information. (THE NEED TO ASSESS AND ADDRESS THE INFRASTUCTURE FOR THE VARIOUS DIGITAL RADIOGRAPHY TECHNOLOGIES SHOULD BE ADDRESSED ALSO.)

1-6.7 **Addition-Alteration Facility Information**. For these projects, information is provided on the type and characteristics of existing construction, size of facility, condition of utilities and services, existence of significant known code or safety issues, and descriptions of previous alterations or additions of significance.

1-7 DESIGN CONSIDERATIONS.

1-7.1 **Economic Feasibility**. Project designs must be functional, aesthetically pleasing, and cost effective to acquire, maintain, and operate. The goal of every design is to provide the most functional, life-cycle cost-effective, maintainable, design possible within the available funds.

1-7.1.1 Cost estimates during design for building systems and casework shall be based on Figure 1-2. Logistical responsibility is explained in Section 15 and in the glossary.

1-7.2 **Planning Procedures for the National Capital Region (NCR)**. Planning for all facilities in the NCR shall comply with MIL-HDBK-1190 (reference 1e) and OMB Circular A-11 (reference 3r). Master plans for facilities in the NCR shall be submitted to the National Capital Planning Commission (NCPC) or the Commission of Fine Arts (CFA), or both, as required by the policies issued by the Commissions. The NCR is defined as the District of Columbia; Prince Georges and Montgomery Counties in Maryland; Arlington, Fairfax, Loudoun and Prince William Counties in Virginia; and all cities and towns within the outer boundaries of the foregoing counties.

1-7.3 **Future Expansion**. Incorporate considerations for future expansion into all designs. Consider both external and internal expansion of vital functions such as ancillary and utility services. Building siting, vehicular access, structural systems, departmental adjacencies, functional layouts within departments, and utility type and source all play major roles in developing an economically expandable design. Provision for future vertical expansion is authorized when approved by TMA/PPMD.

1-7.4 **Construction Quality**. Facilities shall be designed and constructed to provide a well-built and enduring product at the lowest practicable life cycle cost. Specific criteria for individual spaces are set forth in Appendix A. Materials used in design and construction of overseas projects shall be in character with materials, techniques, and methodologies used for similar structures in that country unless, in the opinion of TMA/ PPMD, the Design Agent and the using Military Department, U.S.

standards should prevail.

1-7.5 **Environmental Quality**. Congressional and administrative guidance for general policies regarding environmental quality is provided in MIL-HDBK-1190 (reference 1e). Additionally, comply with all Service specific requirements for environmental quality.

1-7.6 **Fallout Protection**. Provide Fallout protection according to the policy guidance given in MIL-HDBK-1190, (reference 1e), and as directed by the TMA/PPMD, using Military Department and Design Agents.

1-7.7 **Antiterrorism and Force Protection (AT/FP)**. All projects must comply with the Department of Defense Minimum Antiterrorism Standards for Buildings AT/FP (reference 1l) (UFC 4-010-01) or latest revision as established and released by the Department of Defense.

1-7.8 **Disposition of Excess Facilities**. Provide descriptive plan for the removal of excess facilities.

1-7.9 **Sustainable Design**. Incorporation of sustainable design features which enhance the Environment of Care and minimize the overall impact of the facility on the environment should be a fundamental design goal, in keeping with the medical functionality and project funding limitations (See Section 3).

1-7.10 **Evidence Based Design**. In January 2007, The Assistant Secretary of Defense for Health Affairs directed that future military health facility designs incorporate patient centered and evidence based design principles to the maximum extent practicable. Evidence Based design (EBD) is the conscientious, explicit and judicious use of current best evidence in making planning and design decisions that advance the needs of patients, staff, families and organizations.

These planning and design decisions are based on a set of processes that incorporate innovative health planning, delivery, and evaluation methods grounded in mutually beneficial partnerships among health care providers, patients and families. The goals focus on promoting integrity of the clinical encounter, empowering the patient, relief of suffering, and promoting long-term health and wellness.

1-8 **IMPROVEMENT / ALTERATION OF EXISTING FACILITIES**. The criteria contained herein are not to be used as the sole justification for any addition, alterations or improvements to an existing facility. Rather these criteria define requirements that shall be met when improvement or alterations of existing facilities, or sub-portions or systems thereof, are specifically authorized by reference in the project document.

1-8.1 **Levels of Facility Alteration**. Categorize and estimate all costs associated with projects containing altered areas including the cost of temporary structures, if required, according to the following definitions:

1-8.1.1 Level 1 - Light alteration includes minor partition layout changes, new

finish treatment, minor casework and equipment changes, minor modifications to Heating, Ventilation and Air Conditioning (HVAC) distribution systems, and minor electrical branch circuit changes. The estimated cost of this alteration should not exceed 30 percent of replacement cost for the same type of facility.

1-8.1.2 Level 2 - Medium alteration includes Level 1 changes, minor-to major partition layout changes with associated modifications to the HVAC distribution systems and electrical power and light requirements, minor structural modifications, new plumbing fixtures, allowances for roof repair, and changes in mechanical system insulation when asbestos is present. The estimated cost of this alteration should not exceed 50 percent of replacement cost for the same type of facility.

1-8.1.3 Level 3 - Heavy alteration includes Level 1 and 2 changes, gutting of the building to structural frame without demolishing floors, exterior walls and roof assembly, modifications to structural frame, main electrical distribution system, air handling units and auxiliary equipment, plumbing system, and energy plant. The estimated cost of this alteration should not exceed 75 percent of replacement cost for the same type of facility.

1-8.1.4 Proposed alteration projects with a cost exceeding the 75 percent of replacement cost must be considered for a total replacement of the facility unless other restrictions make it an infeasible option.

1-8.2 **Interim Facilities**. The cost of interim facilities (temporary construction), if required, shall be included in the estimated cost for each of the above levels of alteration.

1-8.3 **Site Investigation**. Designers shall conduct thorough investigations of existing facilities to be upgraded or modified, in accordance with the conditions of their design contracts, to become knowledgeable of facility conditions. This includes the need to inspect concealed spaces (above-ceiling areas, chases, and equipment rooms, for example), to permit evaluation and accurate depiction of as-built conditions. Design agents are responsible to assure that the scope of work for each design contract describes this designer responsibility. Generally, designers should be required to directly inspect all equipment rooms and all above-ceiling areas in enough locations as to reasonably establish the existing conditions in all major areas and departments, and on each floor, of a given project facility. In facilities with "hard" ceilings, this may require the creation of inspection openings, and the need to establish in the Scope of Work the responsibility for making and repairing these openings. The design team must recognize the economic advantages of a detailed designer site investigation: if the designers do not verify conditions, the construction contractor must do so, normally at a cost premium reflected in higher bidding costs (unknown conditions) and change orders (changed conditions).

1-8.4 **Modifications to Existing Systems**. Modifications to existing equipment and systems, including temporary connections, changes to system performance, or measures necessary to sustain service, shall be shown and described in detail in project design documents. Designers shall evaluate the impact on existing systems of "tap-ins" which increase overall system demand. The locations of new connections shall

clearly be shown and/or described. The designer shall determine, and document for the design agent's information, any project work which will necessitate a reduction or interruption of any service to an existing, occupied area.

1-8.5 **Protection of Patients from Construction Contaminants**. For additions or alterations to existing hospitals, design projects shall include instructions (including specifications, drawings, drawing notes, and details, as applicable) defining measures required of the construction-contractors to minimize contamination of the existing medical facility. Measures to reduce the potential of contamination and nosocomial infections include but are not limited to negative isolation of construction areas, construction of effective dust barriers, protection of air distribution systems serving occupied areas, maintenance of adequate handwashing stations, and disinfection of any reused ductwork. Designers should consult with the facility's infection control representative and facility management during the design process to assure thorough coordination of design features that may affect patient welfare.

1-8.6 **Construction Phasing Plan**. The development of construction phasing plays a role in the construction of new medical facilities and definitely plays a major role in renovated medical facilities. The designer shall provide at a minimum, one workable phasing plan that will accommodate all major construction elements and owner impacts outside of what would be considered normal or industry established construction sequence of work. Along with major construction elements the procurement of major medical equipment shall be considered in the development of the phasing plan. Provide a narrative and graphic node diagram showing the major construction elements, relationships, and restraints. The node diagram shall not be time scaled. Site, architectural and utility plans shall accompany the narrative and diagram to delineate the boundaries of all areas within and affected by a particular phase. The duration of Government activities and impacts shall be determined and identified. The designer shall also determine the overall duration of the project but the duration of individual phases shall not be indicated.

1-8.7 **Incremental Systems Testing/Placement in Service.** Designers shall describe the procedures required to perform pre-acceptance equipment testing, functional system testing, and certification of satisfactory operation for systems constructed in an incremental or segmental fashion. An example of such a case might be a medical gas system upgrade to an existing facility, constructed and placed into operation incrementally on a department-by-department or floor-by-floor basis. Similar procedures shall be provided for existing systems, which are incrementally taken out of service.

1-8.8 **Seismic Upgrades**.

1-8.8.1 Policy. The Department of Defense policy is to provide a framework to make the most effective use of medical Military Construction (MILCON) funds and to accommodate the concerns and legal requirements associated with the seismic risks faced by military hospitals. The Earthquake Hazards Reduction Act (P.L. 95-124), (reference 1i) and the National Earthquake Hazards Reduction Program, while indicating the need to ensure that critical facilities such as hospitals are serviceable

following an earthquake, also recognizes that the measures necessary to implement seismic requirements are extremely expensive.

1-8.8.2 Corrective Actions. When existing facilities having seismic deficiencies are being programmed, the seismic problem will be considered along with all other factors used in developing the requirement for a construction project. When programming existing facilities that are located in areas of seismic vulnerability, a seismic evaluation of the facility will be done early in the project development process so that rehabilitation funds, if needed, could be programmed prior to project authorization. The corrective measures planned must address all factors including earthquake safety, be consistent with system wide priorities, and be undertaken in a reasonable manner.

1-8.9 **Types of Medical Facility Upgrade Surveys**. Facility deficiency tabulation and upgrade surveys will be funded by the Military Department and based on the following guidance. The Using Service will provide the design agent a completed Checklist for Medical Facility Upgrade Survey Figure 1-3 to establish the scope of facility upgrade survey projects.

1-8.9.1 Basic Life Safety Survey. Facility is surveyed for compliance with: NFPA 101 (reference 1f), Chapter 13, "Existing Health Care Occupancies"; and part of NFPA 99 (reference 1g), Chapter 3, "Electrical Systems". This type survey only addresses the basic life safety and fire safety issues covered in NFPA 101, Chapter 13 and NFPA 99, Chapter 3 including: means of egress; protection; detection, alarm, and communication systems; building services; and essential electrical systems. The scope of this type survey is limited by using the exception allowed in NFPA 101, paragraph 7-1.2, so that the survey will not evaluate general compliance with other referenced NFPA Standards. However, the scope is extended to include the Life Safety Branch of the essential electrical system in accordance with NFPA 99, Chapter 3, because the condition of the life safety branch is vital to basic life safety in health care facilities. The end product of this survey is a limited "Deficiency Tabulation Report" that: identifies and prioritizes the deficiencies; proposes corrective solutions; and provides a cost estimate for corrections.

1-8.9.2 Life Safety and Utility Systems Survey. In addition to the requirements of the "Basic Life Safety Survey" this type of survey also includes evaluation of the capacity and condition of building utility and support systems in relation to UFC-4-510-01 and using military department criteria. The end result of this survey is a "Deficiency Tabulation Report" that: identifies and prioritizes the deficiencies; proposes corrective solutions; and provides a cost estimate for corrections. This type of survey could include: electrical systems including compliance with NFPA 70, "National Electrical Code" (reference 1h); communication and signal systems; heating, ventilating, and air conditioning systems; plumbing and medical gas systems; and transportation systems.

1-8.9.3 Facility Modernization Survey. In addition to the requirements for the "Life Safety and Utility Systems Survey," this survey provides a complete evaluation of the functional and facility deficiencies in relation to UFC-4-510-01 and using military department criteria. The end result of this survey is a proposed program and cost estimate to correct the functional, architectural, and engineering deficiencies to

dramatically extend the useful life of a facility. This type of survey could include: functionality, medical equipment, building systems, architectural finishes, mechanical, plumbing, electrical, communication, fire and life safety, and transportation systems.

1-8.9.4 Special Studies. Any of the surveys described above could include special studies where required for a specific facility. The more common types of special studies include:

a. Economic Analysis - New vs. add/alt construction vs. lease, etc. (Required for all projects with a projected cost of $2 million or more.)

b. Seismic/structural.

c. Hazardous/Toxic Substances - Asbestos, PCB's, Lead in paint or in potable water, mercury contamination, etc.

d. Maintenance and Repair Deficiencies.

e. Americans with Disabilities Act and Architectural Barriers Act Accessibility Guidelines.

1-9 **TYPES OF CONSTRUCTION**. Construction levels and building types are outlined in MIL-HDBK-1190, Chapter 1 (reference 1e).

1-10. **TOTAL BUILDING COMMISSIONING**. Commissioning is defined by the building industry as the process of verifying that all building systems perform interactively according to the design intent, and the systems meet the Owner's operational needs. Implementation of commissioning for a complex medical facility requires a higher level of comprehensive oversight of both the design and construction process. Typical of the building systems/system interfaces found in the larger MTFs which may require Total Building Commissioning, are the following:

- Complex HVAC systems, including electronic digital control systems.
- Medical and Dental gas, compressed air, and vacuum systems.
- High pressure steam, clean steam, and other major energy plant equipment.
- Emergency Power systems, and their interfaces to other critical building system operations.
- Fire detection and alarm systems, and their interfaces to other critical building system components.
- Electronic communications systems including voice and data transmission, nurse call, closed circuit TV, and others.
- Building systems which are incrementally constructed and commissioned, such as in phased construction projects.
- Critical envelope elements in severe climactic regions.

On a project by project basis, the Design/Construction Agent and Owner must

determine in concert the extent and level of services required during project design and construction to achieve Total Building Commissioning. The Design/Construction Agent is responsible for the implementation of the Total Building Commissioning Process. Additional reference publications which describe the Commissioning Process are provided at references 1k, and 1l.

1-10.1 **Commissioning During Design**. For each project, design documents must be developed to adequately define functional testing procedures and operator training for building systems and their operational interfaces. Documentation must define the hardware needed to facilitate testing, requirements for testing instrumentation, the qualifications of testing personnel, and the required documentation of test results. The more complex the project and its supporting systems, the more complex the functional testing requirements become and the greater the expertise required to develop, and review for QA purposes, this documentation. Documentation for simpler projects and systems are more easily adapted from guide specifications and criteria guidance. Adequate design commissioning for almost all facilities associated with patient treatment mandates the involvement of the Agent's Medical Specialized Design Office or Center. For larger inpatient clinics, ambulatory surgery, and full service hospitals and medical centers, and in particular for projects involving additions and alterations, the commissioning effort may include designer and/or QA involvement by experts in systems commissioning and maintenance.

1-10.2. **Commissioning During Construction**. During the construction project, it is necessary for the Agent to assure that the contractor's proposed testing procedures, personnel, and instrumentation fully meet the design document requirements and that the tests are properly conducted and results documented. For complex or high cost equipment and system shop drawing submissions, review by the original designer may be required to assure compliance with design intent, particularly when deviations from the original design are proposed by the construction contractor. For the more complex or medically unique systems, proposed testing procedures should be reviewed by technical personnel experienced in such systems commissioning, and who report directly to the Construction Agent. These personnel should also provide QA inspection or oversight of the contractor's functional testing, test documentation, operating and maintenance materials, and operator training.

1-11 **PARKING FACILITIES**. Parking design should be selected based on minimum use of land for maximum number of spaces for both organizational and non-organizational vehicles. Parking areas should be coordinated with the location of underground utility services. In the interest of economy and efficiency of land use, joint use parking may be considered where feasible. Where relatively large parking lots are unavoidable, natural terrain features and allocation of natural tree islands should be combined effectively to relieve the unfavorable view without jeopardizing the snow removal functions where applicable. When mature trees or vegetation exist on a site, every reasonable effort should be used to integrate them into the parking areas. Criteria and allowances for parking spaces for non-organizational vehicles shall be in accordance with Table 1-1 (reference 1n).

1-11.1 **Parking Structures**. Parking structures or garages will be considered

when the site is too small to accommodate required parking, the value of the land is excessive, the site is located in a harsh climate, or the required amount of parking spaces creates an oversized area with extreme walking distances. TMA/PPMD will approve parking structures on a case-by-case basis.

Table 1-1. Required Parking Spaces for Medical and Dental Treatment Facilities

Number of Parking Spaces Required = (.75)(X1)+(.40)(X2)+(X3)+(X4)

X1 = All personnel working in the Healthcare Facility on a full-time basis, plus an allowance for visitors and part-time staff. Include FTE's, contract maintenance, Red Cross volunteers, base exchange, clergy, interns, technical school trainees, Veterans Affairs and other Military Department liaison staff, Reserve, Guard, PME and visitors (i.e. Commander, CHAMPUS, RMO Security, Fire Department consultants, Salespersons, etc.) and shift change overlap. (Use 10 percent if statistics are unavailable for additional visitors, shift overlap, and part-time staff).

X2 = For hospitals and dental facilities, use average daily outpatient workload for "peak month" using 21 workdays per month and 250 workdays per year as a basis for calculation. Workload to be used in calculation is all outpatient visits to clinics plus outpatient O.T., P.T., immunizations, physical exams, inhalation therapy, EEG's, ECG's plus a 10 percent factor for pre-admission testing and paperwork, pharmacy visits (including refills), environmental health, records retrieval, partnership program visits, education programs (birthing, smoking cessation, nutrition), "drop-in" check-ups, school physicals, appointments, DEERS checks, meeting with family members in conjunction with a facility "visit", etc. For ambulatory and outpatient clinics, include average daily outpatient surgical workload for "peak month" using 21 workdays per month and 250 workdays per year as a basis for calculation..

X3 = One space for each In-patient bed. .

X4 = One space for each organizational vehicle.

Notes:

1. This formula should be used as a guide. Additional parking spaces need to be justified.
2. Carpooling, "Reserved" spaces for Command, General Officers, Rewards, and Disabled are included in the above factors.
3. Spaces for Disabled are included in and broken out from the above total and must be allocated per Section 11: Provisions for the Disabled, for both inpatient and outpatient requirements as applicable.
4. Calculations may be adjusted for public transportation (if reliable and available within reasonable walking distance) and for Quarters/Housing (if within reasonable walking distance).
5. Parking lot segregation for staff, patients and visitors will be addressed by using Military Departments during design.

REFERENCES

1a. Title 10, United States Code (USC).

1b. DoD Directive 6000.12, Health Services Operations and Readiness, latest edition.

1c. Executive Order 12372, "Intergovernmental Review of Federal Programs", latest edition.

1d. DoD Directive 5136.12, "Tricare Management Activity (TMA)," latest edition.

1e. MIL-HDBK-1190,"Facility Planning and Design Guide".

1f. NFPA 101, "Life Safety Code."

1g. NFPA 99, "Health Care Facilities Handbook."

1h. NFPA 70, "National Electric Code."

1i. P.L. 95-124, "Earthquake Hazards Reduction Act"

1j. DoD Instruction 6015.17, "Planning and Acquisition of Military Health Facilities", latest edition.

1k. United States Army Corps of Engineers (USACE) ER 1110-345-723, Systems Commissioning Procedures, latest edition.

1l. ASHRAE Guideline 0-2005, The Commissioning Process, latest edition

1m UFC 4-010-01, “Department of Defense Minimum Antiterrorism Standards for Buildings” latest edition.

1n. MTMC Report 74-28, “Traffic Generations at Military Medical Facilities”, Military Traffic Management Command Transportation Engineering Agency, latest edition.

Figure 1-1. Site Checklist

PROJECT NAME: _____ DATE: _____

PROJECT LOCATION: _____

1. ARE ROADS TO SITE ADEQUATE? Y or N

2. IS SITE IN FLOODPLAIN? Y or N

3. WHAT IS PROJECT TYPE? NEW or ADDITION/ALTERATION

4. IS THERE ANY ASBESTOS? Y or N

5. ARE THERE ANY OTHER CONTAMINATION OR SAFETY HAZARDS? Y or N
   TYPE: _____

6. ARE THERE ANY HISTORICAL STRUCTURES ON OR ADJACENT TO SITE?
   Y or N

7. SEISMIC CATEGORY OF SITE? A B C D E F

8. IS THERE ANY EXPANSIVE SOIL AT THIS SITE? Y or N

9. WHAT IS THE GENERAL BEARING STRATA DEPTH IN THIS AREA?

10. ARE SPECIAL FOUNDATIONS REQUIRED? NONE PIERS MAT PILES
    OTHER: _____

11. WHAT IS WATER TABLE LEVEL AT THIS SITE?

12. IS NOISE A PROBLEM? Y or N IF Y, WHAT IS NC-LEVEL?

13. ARE THERE ANY EXISTING STRUCTURES TO BE DEMOLISHED? Y or N

14. DO ANY DISPLACED FUNCTIONS NEED TO BE REPLACED? N/A, Y or N
    IF YES, WHAT ARE THEY? _____

15. DO ANY EASEMENTS CROSS THE PROPERTY? Y or N
    IF YES, WHAT ARE THEY?

16. WHAT IS BASIC SIZE AND SHAPE OF SITE?

17. WHAT IS SLOPE OF SITE? LEVEL 3-8% 9-15% 16-25% >25%

18. IS THERE ANY SIGNIFICANT VEGETATION? Y or N

19. WHAT IS THE PREVAILING WIND DIRECTION?

Figure 1-1 (Continued)

20. WHAT IS AVERAGE ANNUAL RAINFALL? _____INCHES

21. WHAT IS AVERAGE ANNUAL SNOWFALL? _____INCHES

22. WHAT ARE THE CLIMATIC CONDITIONS? WIN DB ____SUM DB____ WB

23. DOES WATER SUPPLY NEED TO BE TREATED? Y or N

24. WHAT IS THE AVAILABILITY OF UTILITIES TO THE SITE?

SYSTEM	DISTANCE TO CONNECTION POINT	CAPACITY TO SITE	AVAILABLE
WATER	_____ FEET	_____GPM	_____PSI
FIRE WATER	_____ FEET	_____GPM	_____PSI
CLEAN STEAM	_____ FEET	_____#/HR	_____PSI
UNTREATED STEAM	_____ FEET	_____#/HR	_____PSI
HI-TEMP HOT WATER	_____ FEET	_____GPM	_____TEMP
CHILLED WATER	_____ FEET	_____GPM	_____TEMP
SANITARY SEWER	_____ FEET	_____GPM	
STORM SEWER	_____ FEET	_____GPM	
GAS	_____ FEET	_____GPM	_____CFM
ELECTRICAL-Primary	_____ FEET	_____KVA	_____KILOVOLT
ELECTRICAL-Alternate	_____ FEET	_____KVA	_____KILOVOLT
CABLE TV	_____ FEET		
FIBER OPTIC LINE	_____ FEET		
COMMUNICATIONS	_____ FEET	_____SWITCH CAPACITY	
REGULATED WASTE	_____ FEET	_____#/DAY	

25. WHAT IS THE FREQUENCY OF LIGHTNING?

26. Is the site coordinated with the installation and tied into the installation Master Plan?

27. Has the history of the site been researched and investigated at least fifty years prior?

Figure 1-1 (Continued)

28. ADDITIONAL REMARKS: (Add additional pages if necessary):

CERTIFICATION OFFICIAL:

NAME:

TITLE:

ORGANIZATION:

SIGNATURE:

Figure 1-2. Logistical Responsibility for Building Systems

Special Instructions. The items listed in this section shall be included in construction cost estimates as appropriate.

ITEM	Logistical Responsibility[1]
BUILDING AND GROUNDS	
Hospital buildings (including administration)	A
Medical Clinic buildings	A
Dental Clinic buildings	A
Clinical and Medical Research Laboratory buildings	A
Animal holding buildings	A
Maintenance shop buildings	A
Garages and automotive shelters	A
Power plant buildings (steam and/or electrical)	A
Sewage disposal plant structures	A
Medical helicopter/air evac landing pads	A
Chapel	A
Recreational building (including Red Cross, gymnasiums and swimming pools)	A
Recreational fields (including tennis courts, baseball diamonds, etc.)	A
Guard and sentry boxes, gate houses	A
Incinerator buildings	A
ELECTRICAL SERVICE	
Wiring (including material)	A
Conduits	A
Switches, panels boxes, service outlets	A
Transformers (step-down and distribution)	A
Lighting, fixtures (including initial lamping)	A
Generating equipment (including emergency)	A
Explosion-proof fixtures	A
Power conditioning/surge protectors	A
HEATING, AIR CONDITIONING, AND VENTILATION	
Air conditioning (including packaged units)	A
Boiler plants and water heaters	A
Heat and steam distribution systems	A
Central vacuum cleaning system	A

[1] See Para 16.2.1 for definition.

ITEM	Logistical Responsibility[1]
PLUMBING	
Piping valves, fittings, and outlets	A
Toilet, bath, and lavatory fixtures (including shower stalls, mirrors, towel racks, toilet paper dispensers, paper towel dispensers, soap dispensers, and bed pan washers	A
Sewer systems and plants	A
Gas, air pressure and suction, and medical gas systems	A
Automatic sprinkler systems	A
Fire protection system (water)	A
REFRIGERATION	
Refrigeration (walk-in)	A
Deep freeze (walk-in)	A
Built-in morgue refrigerators	A
COMMUNICATIONS	
LAN - Local Area Network:	
Conduit, Boxes, Wiring, Patch panels, outlets	A
LAN Equipment	C
Telephone System, Complete:	
Interior Conduits, Boxes, Outlets, Wiring	A
Outside cable and support work	A
Interior Telephone Switching Equipment	A
Supporting Expansion Work at Main Exchange	A
Instruments	C
Intercom systems, Complete:	
Conduits, Boxes, Wiring, and Equipment	A
Public Address System, Complete:	
Conduits, Boxes, Wiring, and Equipment	A
Patient Physiological Monitoring:	
Conduits, Boxes, Blank Outlets	A
Equipment	C
Staff Radio Paging Systems, Complete:	
Conduits, Boxes, Wiring, Equipment	A

ITEM	Logistical Responsibility[1]
COMMUNICATIONS - (Continued)	
Other Radio Systems, i.e., EMS, etc.:	
Conduits, Boxes, Site Support Work	A
Antennas, Equipment, and Wiring	C
Card Access System, Complete:	
Conduits, Boxes, Wiring, Equipment	A
Nurses' Call Systems, Complete:	
Conduits, Boxes, Wiring, Equipment	A
Central Dictating System:	
Conduits, Boxes, Wiring, Outlets	A
Dictation Equipment	C
Intrusion detection System:	
Conduits, Boxes, Blank Outlets	A
Wiring, Sensors and Control Equipment	A
Fire Detection and Alarm System, Complete	A
Clock Systems:-	
Central Clock System, Complete	A
Battery Clocks	C
TRANSPORTATION SYSTEM	A
SIGNAGE (INTERNAL/EXTERNAL)	A

Figure 1-3. Checklist for Medical Facility Upgrade Surveys.

(Select one "Type of Survey" and any "Special Studies" required)

A. Types of Survey

YES NO **1. Basic Life Safety Survey**. Survey will address compliance with the following standards:

a. NFPA 101, Chapter 13, "Existing Health Care Occupancies". Use exception allowed in NFPA 101, para. 7-1.2, so that the survey will not evaluate general compliance with referenced NFPA standards.

b. NFPA 99, Chapter 3, "Electrical Systems" as it relates to Essential Electrical System - Life Safety Branch only.

YES NO **2. Life Safe and Utility Survey.** Survey will address compliance with the following standards:

a. NFPA 101, Chapter 13, "Existing Health Care Occupancies" including general compliance with referenced standards per NFPA 101, paragraph 7-1.2.

b. The building utility systems will be surveyed in relation to: UFC 4-510-01, "DoD Medical and Dental Treatment Facilities Design and Construction Criteria"; and Military Department Criteria. The following systems will be addressed:

YES NO Electrical systems.
YES NO Communication and signal systems.
YES NO HVAC.
YES NO Plumbing.
YES NO Medical gas systems.
YES NO Transportation and material handling systems.
YES NO Other. Provide list.

_____
_____
_____
_____
_____
_____
_____
_____
_____
_____
_____
_____

Figure 1-3 (Continued)
(Select one "Type of Survey" and any "Special Studies" required)

YES NO **3. Facility Modernization Survey.** Survey will address compliance with the following standards:

a. NFPA 101, Chapter 13, "Existing Health Care Occupancies" including general compliance with referenced standards per NFPA 101, paragraph 7-1.2.

b. The building will be surveyed in relation to: UFC 4-510-01, and Military Department Criteria. The following systems will be addressed:

YES NO Site and Parking issues.
YES NO Utility services.
YES NO Structure.
YES NO Exterior Finishes, roofing, glazing, etc.
YES NO Medical/Functional Requirements.
YES NO Architectural finishes.
YES NO Equipment and Furnishings
YES NO Waste Management System.
YES NO Transportation and material handling systems.
YES NO Electrical systems.
YES NO Communication and signal systems.
YES NO Energy Usage/System Efficiency Survey.
YES NO HVAC.
YES NO Plumbing.
YES NO Medical gas systems.
YES NO Other. Provide list.
_____
_____
_____

B. Special Studies

YES NO Economic Analysis. (Attach scope of analysis).
YES NO Seismic/structural evaluation.
YES NO Hazardous/Toxic substance survey.
____ Asbestos survey
____ PCB survey
____ Lead survey (in paint or in potable water)
____ Mercury contamination
____ Underground Fuel Tank Survey.
____ Other. Provide list, _____.
YES NO Maintenance and Repair Deficiency survey.
YES NO Americans with Disabilities Act and Architectural Barriers Act Accessibility Guidelines.
Accessibility Guidelines Compliance.
YES NO Other. Provide list._____.

SECTION 2

DESIGN PROCEDURES, SUBMITTALS, AND DOCUMENTATION

2-1 **GENERAL**. This section defines the minimum OASD-HA (TMA/PPMD) requirements for design procedures, submittals, and documentation for a typical DoD MILCON project. Additional or lesser project specific requirements may be established by the Design Agent(s) in coordination with the using Military Department(s) to meet specific project requirements. Submittal requirement variations for TMA/PPMD submissions must have written TMA/PPMD approval.

2-2 DESIGN GOALS.

2-2.1 **Scope and Criteria**. The goal during concept design (0 to 35%) development is to produce concept design documentation which meets project requirements and complies with criteria while establishing final project scope and an appropriate Programmed Amount (PA) and Design Directive Amount (DDA). Final scope and PA will be based on the approved concept submittal and validated cost estimate.

2-2.2 **Design to Cost**. The goal during the final design phase (35 to 100% design completion) is to produce a set of construction documents within the PA and/or DDA established at the concept design approval. If design requirements or refinements cause the estimated project cost to exceed the established PA or DDA, the Design Agent with participation of the using Military Department, will present cost adjustment or reduction alternatives to TMA/PPMD before completing the design documents.

2-2.3 **Design Schedules**.

2-2.3.1 Major Construction. For specified location projects, the TMA/PPMD goal is to be at concept (35%) design, final RFP or parametric estimate by 1 August of the year prior to planned budget submission. The Design Agent must request written approval from TMA/PPMD for late submission. The goal during final design is to complete design in time for a construction contract award during the program year of the project.

2-2.3.2 Unspecified Minor Construction. For Unspecified Minor Construction (DODI 4270.24, reference 2a), the TMA/PPMD goal is to have designs complete and projects ready for advertisement within 12 months of the date of the original TMA/PPMD Design Authorization Memorandum.

2-3 DESIGN SEQUENCE AND RESPONSIBILITIES.

2-3.1 **2807 Action**. TMA/PPMD issues the Section 2807, Title 10 USC (reference 2b) Congressional notification after the preliminary project scope has been determined and as required to meet design and programming milestones. (See Figure

2-1).

Figure 2-1.
DoD Medical Military Construction Timetable for Planning, Budgeting, and Execution of a "Typical" MILCON Project in the FY XX Program

This is a Minimum Timetable which does not preclude earlier Design Starts for OCONUS, Large, or Complex Projects or to meet Alternative Execution Strategies (e.g., Design-Build, etc) Developed jointly by TMA, the Agent, and the Service--Critical Milestones are in Boldface.

ACTIVITY	FY 09	FY 10	FY 11
Begin FYXX Planning Year	FEB 05	FEB 06	FEB 07
Begin FYXX EA Efforts (Services)	JUL 05	JUL 06	JUL 07
FYXX EA Efforts Completed (Services) and Validated (TMA) Preliminary Scope Available (Services) Determine Execution Strategy (Services/Design Agent/TMA) Submit Project Book to TMA	**APR 06**	**APR 07**	**APR 08**
Final PFD and DD Form 1391 validated by TMA **Release Design Authorization (TMA)** **2807 Action (TMA)** **Issue 100% Design Authorization (TMA)**	**MAY 06** **OCT 06**	**MAY 07** **OCT 07**	**MAY 08** **OCT 08**
Best Concept Design Cost Estimate to TMA (Design Agent)	**JUL 07**	**JUL 08**	**JUL 09**
35% Design Submission to TMA (Design Agent)	**AUG 07**	**JUL 08**	**JUL 09**
Scope and PA Approval (TMA)	SEP 07	AUG 08	AUG 09
FYXX Budget Submitted to OSD(Comp) (TMA)	SEP 07	SEP 08	SEP 09
Issue Final Design Authorization (TMA)	**OCT 07**	**OCT 08**	**OCT 09**
FYXX MILCON Program to Congress (DOD)	**JAN 08**	**JAN 09**	**JAN 10**
Ready to Advertise (Design Agent)	SEP 08	SEP09	SEP10
FYXX Funds Available (TMA)	Nov 08	NOV 09	NOV 10

2-3.2 **Design Funds**. TMA/PPMD suballocates design funds to the Design Agent to achieve the authorized level of design in accordance with Figure 2-1.

2-3.3 **Design Authorization**. The TMA/PPMD issues the design authorization to the Design Agent with an information copy to the using Military Department, as appropriate, to meet design and programming milestones in Figure 2-1.. The Design Agent manages design in accordance with established policies and procedures unless otherwise established in coordination with the using Military Department and TMA/ PPMD during initial project acquisition strategy planning. Separate design authorization memoranda are normally issued for A-E Selection, and Final Design. However, separate or combined DA's may

be issued. The Design Agents shall not pursue any level of design beyond that authorized by TMA/PPMD.

2-3.4 **Architect-Engineer (A-E) Selection Authorization**. This is authorization to synopsize, slate, select an A-E and to negotiate, but not to award a contract, or proceed with design. Following authorization by TMA/PPMD, the Design Agent selects an A-E following their established procedures. The using Military Department may participate in A-E selection in accordance with established Memoranda of Understanding (MOUs). TMA/PPMD may also participate when so specified in the design authorization.

2-3.5 **Concepts (0 to 100%) Design Authorization**. This is authorization to award an A-E contract and to proceed to (100%) level of design. This authorization will normally be issued when a project has an approved Program For Design (PFD), the project is in the appropriate Program FY to start design action, and design funds are available. Normal presentation requirement to the TMA/PPMD is the S4 for scope and cost approval. The Concept Design phase is complete when TMA/PPMD approves the S4 submittal, for scope and cost estimate. TMA/PPMD will revise the DD Form 1391 as required and will provide approval/disapproval to continue to 100%, with review comments, within 14 calendar days of the submittal.

2-3.6 **Concept (35%) Review and Certification**. Following design agent presentation and certification of the concept submittal, TMA/ PPMD certifies to OASD(C) (Comptroller) 35 percent design completion and project cost estimates by 15 September of the year prior to planned budget submission. The TMA/ PPMD will notify the Design Agent and the using Military Department if the Concept Design is disapproved.

2-3.7 **Design Coordination**. Designs will be developed and managed with close coordination between the Design Agent, using Military Department representatives, and TMA/PPMD. TMA/PPMD will be advised of issues relating to scope, design or construction cost, criteria, policy and procedure, and/or schedule.

2-3.8 **Design Changes.** The Design Agent, in coordination with the using Military Department, will submit proposed concept design scope overages and final design scope overages to TMA/PPMD for approval. After the concept design approval by TMA/ PPMD, all scope or lost overages or significant deviations to 1391 line items will be submitted to TMA/ PPMD for approval with justification prior to incorporation into the design. The Design Agent may decide whether or not design should be suspended pending TMA/PPMD action. Design changes which jeopardize the Design Agent's ability to meet the required design schedule will be avoided, unless necessary to meet criteria or mission requirements.

2-3.9 **Stopped or Deferred Designs**. Decisions to stop or defer designs will be made by TMA/PPMD, in coordination with the design agent and military department.

2-4 **REPORTING REQUIREMENTS**. The Design Agents will establish design cost targets, maintain accurate records on design fees, schedules, construction cost, and other project data and report this information as required below.

2-4.1 **Design Funds Status Report**. Provide for all projects authorized for design by TMA/PPMD.

2-4.1.1 Project Status Report. Provide for each project authorized for design by TMA/PPMD.

2-4.1.2 MILCON Funds Status Report. Provide a report for all appropriated projects.

2-5 **DESIGN-BUILD PROJECTS**. Traditional facilities acquisition method of firm-fixed-price design-bid-build can continue to be used, however, other non-traditional project delivery systems, to include design-build and third party contracting, should be considered. With the concurrence of the Using Military Department, the Design Agents may elect to procure medical facilities using the Design-Build process. The Request For Proposal (RFP) for a medical facility shall include a design developed to the approximate 30%-35% level, to effectively establish scope and cost. The Design Agent, in consultation with the Using Military Department, shall determine for each project whether specifications shall be prescriptive, performance, or a combination thereof.

2-6 **DESIGN SUBMITTALS AND DOCUMENTATION REQUIREMENTS**.

2-6.1 **Economic, Architectural, Engineering, and Environmental Studies**. The design is to be supported by architectural, engineering, economic, and environmental evaluations of those features which contribute most to the construction cost, energy efficiency, and environmental impact. The design is to provide the optimum combination for an efficient and effective facility at the most economical cost with the least adverse environmental impact. Such studies shall consider life-cycle-cost of the facility, and not just the initial construction cost. Specific information concerning study requirements will be provided in accordance with appropriate laws and Executive Orders as defined by the Design Agent(s). Economic Analyses (EA) of new versus addition/alteration will be paid for and accomplished by the appropriate Military Department for projects with a program amount of $2.0 million and over prior to any design authorization.

2-6.2 **VALUE Engineering Study (VE)**. The Design/Construction Agent will establish procedures for conducting VE studies in accordance with Office of Management and Budget Circular No. A-131, and P.L. 104-106, section 4306, 10 USC 432, Value Engineering for Federal Agencies, February 10, 1996.

2-6.3 **Design Documentation**. The Design Agent, in coordination with the using military department, is responsible for the design documentation on

each project. The Contract A-E will be held fully accountable for design in accordance with the "Responsibility of the Architect-Engineer Contractor" clause set out in FAR 52.236-23.

2-6.3.1 SUBMISSIONS required for TMA/PPMD Reference Appendix B.

2-7 **DESIGN REVIEW POLICY**. Prior to use of a design documents package for construction, the Design Agent shall conduct an independent review to evaluate the completeness and quality of the documents. This review does not replace or nullify the designer's own quality control process or review responsibilities. The A-E will be held fully accountable for design in accordance with the "Responsibility of the Architect-Engineer Contractor" clause set out in FAR 52.236-23. The Design Agent shall review to establish that the designer has fulfilled the documentation requirements of his contract, adequately addressed any unique government requirements, and provided documents exhibiting a level of accuracy, coordination, completeness, clarity, and absence of error indicative of a quality design and an effective designer quality control procedure.

2-7.1 **Review Agency Qualifications**. Designs prepared by private A-E firms or geographical elements of the Design Agent will be reviewed by the Design Agent's Medical Facilities Design Office or Medical Facilities Center of Expertise, employing a highly qualified, multi-disciplinary team of engineer and architect professionals with extensive experience, and day-to-day involvement in, medical facility designs and technical issues. All medically unique aspects of the design, and all aspects of design shown to be historical areas of concern for medical facilities, shall be reviewed by the Design Agent's Medical Facilities Design Office or Center of Expertise. Design Agents may designate qualified engineer and architect professionals without extensive experience in the medical field to review general aspects of medical facility designs.

2-7.2 **Constructability Review**. The Design Agent shall provide for an independent Constructability Review for all medical facility projects.

2-8 **DESIGN MANAGEMENT PLAN**. For each project, the Design Agent shall develop a plan for managing the design of the facility. This plan shall identify project schedule and milestones.

2-9 **CONSTRUCTION COST ESTIMATES**. Preparation, review, and approval of construction cost estimates shall be in accordance with established design agent practices. All estimates prepared by A-E firms will be reviewed and validated by the cost engineering element of the design agent. Estimates prepared by in-house personnel will be reviewed in accordance with established procedures. The quality and integrity of cost estimates will not be compromised in order to meet completion deadlines or imposed budget requirements.

2-10 **FINAL DESIGN (100 PERCENT)**. The final design phase may continue only after approval of Concept Design by the TMA/PPMD.

2-10.1 **Comprehensive Interior Design (CID)**. The final design phase, at option of the using Military Department, may include a CID effort for furniture and accessory selection, layout and identification, and documentation for procurement. Subsequent selections of furnishings and medical equipment are to be coordinated with the CID.

2-10.2 **Final Submittal To TMA/PPMD**. When the design is complete, the Design Agent will submit a copy of the final documents (i.e. CD-ROM, drawings, specification, cost estimate, etc.) to TMA/ PPMD. Along with this package, the Design Agent shall provide a memorandum to TMA/PPMD certifying that the design has been completed and that all technical requirements and cost criteria approved at the 35 Percent Design stage have been incorporated into the Final Design.

REFERENCES

2a. DOD Directive 4270.36, “DOD Emergency, Contingency, and Other Unprogrammed Construction Projects” latest edition. http://www.dtic.mil/whs/directives/corres/pdf/d427036_051797/d427036p.pdf

2b. Section 2807, Title 10 USC, "Architectural and Engineering Services and Construction Design."

Figure 2-2. Instructions for Preparing Gross Area Tabulation.

This is the square meter (foot) quantity number used on the project DD Form 1391. The gross area documentation consists of calculation and tabulation of the building gross floor area illustrated with small scale, single-line dimensioned drawings as demonstrated in the attached figure. The following procedures will be used to calculate the gross building area.

a. The gross area includes the total area of all floors with a floor-to-ceiling height of 2134 mm (7 ft) or greater, including basements, mezzanines, penthouses, mechanical and electrical spaces, enclosed loading docks, and ambulance garages. Gross area is measured from the exterior surfaces of all enclosing walls except where the exterior wall surface overhangs the exterior window surface by one foot or more. In this case, the gross area is measured from a point one-half the distance between the exterior plane of the window glazing and the outermost plane of the wall.

b. The following spaces are counted as one-half of the actual gross area:

(1) Exterior balconies and porches.
(2) Covered but not enclosed walks, passageways, ramps, ambulance shelters, and entry canopies.
(3) Exterior open stairs (covered or uncovered).

c. The following shaft type elements are counted in the gross area of one floor only: atria, unenclosed floor openings, stairs, escalators, elevators and lifts, mechanical and electrical shafts, and other shafts connecting two or more floors.

d. The following areas are not counted in the gross area: spaces with less than seven foot floor-to-ceiling height; exterior insulation applied to an existing building; exterior, uncovered, unenclosed terraces, mezzanines (concrete deck to count in the gross area), ramps, stoops, and pads; open courtyards; utility tunnels; equipment yards; and crawl spaces. Crawl spaces with a clear height of 2100mm (7 ft) or greater are not counted in the gross area provided the clear height of 2100mm (7 ft) and greater is the result of the natural site terrain or foundation construction.

e. The gross area for site and supporting facilities, such as the central utility plant, pump house, and utility buildings, which are not included in the Program For Design is tabulated separately from the main building gross area tabulation. The gross area of all site and supporting facilities which are identified in the Program for Design is accounted for in the main building gross area tabulation.

f. A separate tabulation is required for the mechanical area. This tabulation will include the net area of all mechanical, electrical, and telecommunication rooms and utility shafts. Walls, partitions and structural elements associated with these spaces are included in the general gross area not the mechanical area. Vertical circulation spaces, such as elevators, escalators, lifts, stairs, and trash chutes, are counted in the general gross area not the mechanical area. Mechanical, plumbing, electrical, and telecommunication shafts are counted in the mechanical area.

Figure 2-2 (continued). Instructions for Preparing Gross Area Tabulation.

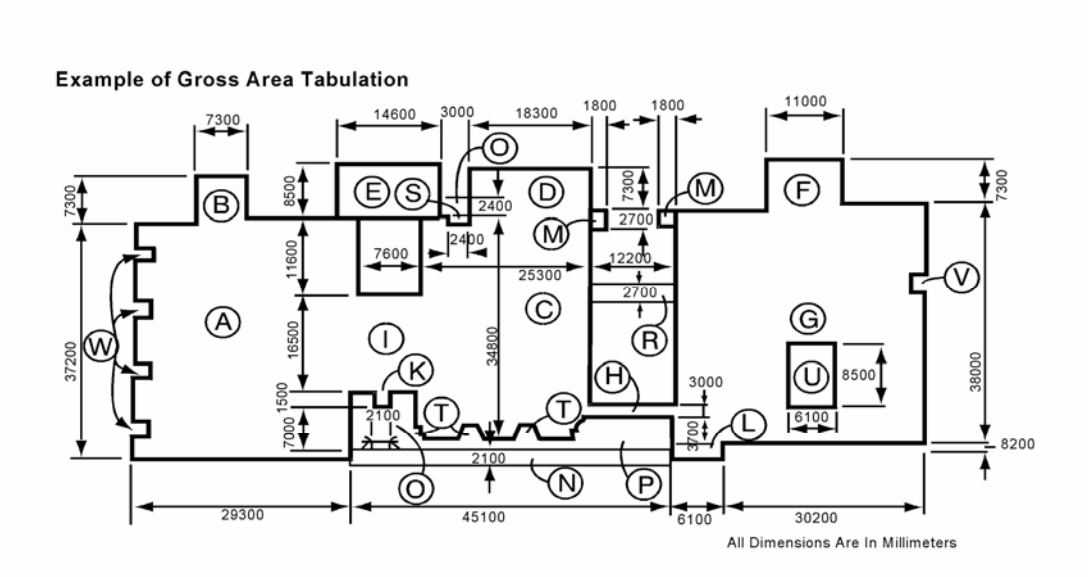

GROSS AREA TAKE-OFF

Plan Area Reference/Type	Plan Dimensions		Scope	GSM
A bldg. space	29300 x 37200	x	1.0	1089.96
B "	7300 x 7300	x	1.0	53.29
C "	25300 x 34800	x	1.0	880.44
D "	7300 x 18300	x	1.0	133.59
E "	8500 x 14600	x	1.0	124.10
F "	7300 x 11000	x	1.0	80.30
G "	36300 x 38000	x	1.0	1379.40
H "	3000 x 12200	x	1.0	36.60
I "	7600 x 16500	x	1.0	125.40
K "	1500 x 2100	x	1.0	3.15
L "	700 x 6100	x	1.0	4.27
M entry canopy	1800 x 2700x2	x	.5	4.86
N covered walk	2100 x 45100	x	.5	47.35
O "	2100 x 7000	x	.5	7.35
P "	2100 x 3700	x	.5	3.88
Q covered porch	2700 x 3000	x	.5	4.05
R covered walk	2700 x 12200	x	.5	16.47
S covered porch deduct	1200 x 2400	x	-.5	-1.44
T alcove deduct	1700 x 1800x3	x	-1.0	-9.18
U courtyard deduct	6100 x 8500	x	-1.0	-51.85
V alcove deduct	1200 x 2400	x	-1.0	-2.88
W "	1200 x 1800x4	x	-1.0	-8.64

First Floor Total Gross Area 3920.47

Figure 2-3. Net to Gross Square Meter (GSM)[1] Calculations

FACILITY W/O HARDENING
NEW/REPLACEMENT PROJECT

ALLOWANCES/CATEGORIES

	MEDICAL /DENTAL CLINICS	AMBULATORY HEALTH CARE FACILITIES	STATION/ COMMUNITY HOSPITALS	REGIONAL MEDICAL CENTERS
TOTAL NSM[2]	NSM	NSM	NSM	NSM
MECHANICAL	12.0% of NSM	14.0% of NSM	15.0% of NSM	15.0% of NSM
CIRCULATION of NSM	41.0% of NSM	41.5% of NSM	42.0% of NSM	46.0% of NSM
WALLS & PARTITIONS	14.0% of NSM	15.0% of NSM	15.5% of NSM	15.5% of NSM
HALF AREAS	1.5% of NSM	1.5% of NSM	1.5% of NSM	1.5% of NSM
FLEXIBILITY	1.0% of NSM	1.0% of NSM	1.0% of NSM	1.0% of NSM
TOTAL GSM	168.5% of NSM	172.0% of NSM	174.0% of NSM	180.0% of NSM

NOTES:

1. GSM = Gross Square Meter

2. NSM = Net Square Meter

3. For hardened facilities, increase walls & partitions allowance by 1.0%; and half areas allowance by 2.0%.

4. For addition/alteration projects, up to 15% of the gross total alterable space may be added to the flexibility allowance to offset physical constraints in the existing facility. Gross alterable space is defined as the existing net space, interior partitions, departmental circulation, and mechanical spaces within the departmental/functions included in the Program for Design, plus general circulation immediately adjacent to the affected departments/functions. This increased allowance, which for programming and planning purposes will be considered to be new or addition scope, must be validated during design.

5. For most projects the building gross square footage calculation method will be used. However (in addition/alteration projects), a departmental gross square footage calculation method is available in DoD space planning criteria.

SECTION 3

ARCHITECTURAL

3-1 **GENERAL**. This section provides architectural design guidance. All facilities shall employ an economical, completely functional architectural design. Designs will be closely governed by standard healthcare, Department of Defense, and Military Department specific functional requirements and criteria specified herein.

3-2 **EXTERNAL DESIGN**. Adhere to applicable installation design guidance when feasible.

3-3 **EXTERIOR WALL DESIGN**.

3-3.1 **Energy Performance.** All facilities shall comply with ASHRAE 90.1, E.O. 13423 (reference 3i) and UFC 3-400-01, Energy Conservation. Obtain the thermal characteristics of single materials or wall assemblies from the American Society of Heating, Refrigeration and Air-conditioning Engineers (ASHRAE) Handbook of Fundamentals (reference 3c) or from manufacturer's certified technical information. Identify thermal resistance (R) values for each element in the building shell. Prepare "U" factor calculations following recommended procedures as documented in the ASHRAE Handbook of Fundamentals (reference 3c).

3-4 **FENESTRATION AND WINDOWS**.

3-4.1 **Required Locations**. Exterior windows must be provided in normal nursing care, Intensive Care and Cardiac Care bedrooms, Prosthodontic Dental Treatment Rooms (non-tinted), and Prosthodontic-Ceramics Laboratories (non-tinted). Natural lighting may be provided in Dermatology Clinics, if required by the using Military Department.

3-5 **INTERIOR CONSTRUCTION**.

3-5.1 **Aseptic Environments**. Selection of interior construction and finishes must consider the need for aseptic environments. Use smooth, nonporous, seamless materials, recessed cabinets with radiused inside corners to minimize contamination and reduce housekeeping requirements. Smooth, seamless wall and floor coverings facilitate cleaning. As a minimum, the following areas shall be designed for ease of housekeeping with elimination of materials or surfaces which could harbor contamination, and to minimize maintenance requirements:

a. Oral Surgery Rooms, Dental Treatment Rooms

b. Special Procedure Rooms – Cardiac Catherization, Angiography, Endoscopy, etc.

c. Operating and Delivery Rooms

d. Emergency and Trauma Rooms

e. Decontamination Rooms in Surgery, Delivery, and Central Processing and Distribution (CPD)

f. Sterile Storage Rooms (Surgery, Delivery, CPD)

g. Substerile and Recovery Rooms (Surgery and Delivery)

h. All Patient Treatment Rooms

i. Intravenous Admixture and Chemotherapy Preparation Rooms in Pharmacy.

3-6 **FLOORS**.

3-6.1 **Floor Finishes**. Refer to UFC 4-501-01 Appendix A.

3-7 **WALL AND PARTITION SYSTEMS**. Select systems which permit modification with the minimum cost and difficulty within acoustical and fire criteria, except in areas subject to severe impact. Reference Appendix A.

3-7.1 **Use of Full Height Partitions**. Full height partitions, floor to structural slab above, shall be used in the following rooms, spaces, and compartments for sound attenuation and for physical security purposes:

a. Medical Record Storage areas (paper file areas or large centralized areas)

b. Materiel Services Storage areas

c. Central Processing and Distribution Storage areas

d. Pharmacy

e. Prosthodontics and Ceramic Laboratory

f. Medical Equipment Maintenance and Repair

g. Orthotic Appliance Manufacturing

h. Facility Engineer Maintenance Shops

i. Pulmonary Function and Laboratory

j. Medical Service Account (MSA) Funds Storage

k. LDR/LDRPs

l. Corridors

3-7.2 **Barriers**. Design protective barrier partitions to protect occupants or equipment in rooms, spaces and compartments from fire, smoke, radiation exposure, electrical interference, MRI shielding (reference Section 16), or for physical security purposes; reference Appendix C for specific radiation shielding criteria.

3-7.3 **Protection**. Use bumper guards and corner guards on walls in areas subject to frequent abrasion and impact, such as corridors, utility rooms, central processing and distribution (CPD), gurney storage and others.

3-8 **CEILINGS**.

3-8.1 **Support**. Use of suspended ceiling surfaces for the direct support of intravenous infusion tracks, cubicle curtain tracks, and ceiling lights is not acceptable. Ceiling-mounted accessories shall be secured through the ceiling to secondary support members.

3-8.2 **Utility Access**. Provide maximum accessibility in corridor ceilings to the mechanical and electrical distribution systems. Do not use concealed-spline ceiling systems requiring special tools to lower tile assemblies. Color-code the access panels into ceiling plenums with tabs to identify the type of utility present.

3-9 **VESTIBULES AND DOORS**.

3-9.1 **Exterior Vestibules**. Vestibules shall be provided at primary patient entrances. Vestibules shall comply with UFAS/ADAAG requirements and be of sufficient depth to allow the outside doors to close before the inside doors are opened.

3-9.2 **Automatic Doors**. Electrically operated or hydraulically operated automatic doors shall be provided for Emergency Trauma entrances and primary patient entrances of Medical Treatment Facilities for new construction. Facility entrances are based on facility size and mission.

3-9.3 **Doors, Frames and Hardware**. Door sizes are as indicated in Appendix A. Unless otherwise required, all doorframes shall be hollow metal. Door hardware shall be of the highest quality, provide durability in high use occupancy, meet UFAS/ADAAG requirements, and be aesthetically compatible with the design of the facility. A source of guidance on appropriate hardware selections and schedules is contained in reference 3h.

3-10 **SUSTAINABLE DESIGN**. When required by the Using Service, and when appropriate funding is clearly set aside for the purpose on the Project 1391, the Design Team may pursue attainment of achievement of a given ranking level, or total points accumulation, in a Sustainable Design rating system such as provided by Leadership in Energy and Environmental Design (LEED) or Green Guidelines for Healthcare (GGHC). The Design Agent shall be responsible to verify achievement of a point total equivalent to the LEED or GGHC target level, unless supplemental funds are provided by the Using Service for the certification review and documentation services by others (See Section 1).

REFERENCES

3a. UFC 3-600-01, “Design: Fire Protection Engineering for Facilities.” latest edition. http://www.wbdg.org/ccb/DOD/UFC/ufc_3 600_01.pdf

3b. NFPA 101, “Life Safety Code”, National Fire Protection Association, latest edition.

3c. American Society of Heating, Refrigeration and Air Conditioning Engineers (ASHRAE), “Handbook of Fundamentals”, latest edition.

3d. MIL-HDBK-1190, “Facility Planning and Design Guide”.

3e. ANSI Z97.1, “Glazing Materials Used in Buildings, Safety Performance Specifications and Methods of Test”, American National Standards Institute.

3f. NFPA 80, “Standard for Fire Doors and Fire Windows”, National Fire Protection Association, latest edition.

3g. DG 1110-3-122, “Design Guide for Interiors”, U.S. Army Corps of Engineers, latest edition.

3h. Door and Hardware Institute, “Hardware for Health Care Facilities”, latest edition.

3i. Executive Order 13423, Strengthening Federal Environment, Energy and Transportation Management, latest edition.

SECTION 4

STRUCTURAL DESIGN

4-1 **GENERAL**. This Section provides criteria for the selection, analysis, and design of structural system(s) and materials to be used for military health care facilities. Additional criteria relating to seismic design is provided in Section 5, Seismic Design, of this Unified Facilities Criteria.

4-2 **DESIGN CRITERIA**. Structural design for military health care facilities shall be in accordance with UFC 1-200-01 (references A). The Occupancy Category of buildings and other structures shall be determined based on the nature of occupancy according to UFC 3-310-01 (reference B) for the purpose of applying wind, snow, earthquake, or ice loadings. See paragraph 5.2 of this UFC for additional guidance related to the determination of Occupancy Category.

4-3 **DESIGN LOADINGS**. Unless otherwise indicated herein, the minimum design loadings for military health care facilities shall be in accordance with UFC 1-200-01 (reference A) and UFC 3-310-01 (reference B).

4-3.1 Floor live loads shall be in accordance with UFC 3-310-01 (reference B), and as amended by Appendix A.

4-3.2 **Wind Loads**. Determine basic wind speeds from the tables in UFC 3-310-01 (reference B), unless a site-specific study of local records indicates a higher value should be used. If a building location is not in the referenced tables, the basic wind speed maps in the International Building Code (reference AA) may be used. The tables are based on an “Exposure C”, and a 3-second gust 10 meters (33 feet) above the ground. Design basic wind speeds will normally be based on "Exposure C" conditions unless “Exposure D” conditions are justified. “Exposure B” shall not be used unless it can be clearly established that the surrounding conditions currently justify a “Surface Roughness B” classification, and that the classification will exist for the expected life of the structures. Give appropriate consideration to unusual channeling, lifting, or gusting effects from mountainous terrain, gorges, ocean promontories, or other special conditions.

4-3.3 **Snow Loads**. Determine ground snow loads from the tables in UFC 3-310-01 (reference B), unless a site-specific study of local records indicates a higher value should be used. If a building location is not in the referenced tables, the ground snow load map in the International Building Code (reference AA) may be used.

4-3.4 **Seismic Loads**. Requirements for seismic design are contained in Section 5 of this document.

4-3.5 **Load Combinations**. The basic design loadings shall be considered to act in union in the combinations given in the International Building Code (reference AA). Use the combination or combinations of loadings, with the appropriate load factors, that

produce the most critical loading on the structure and / or any structural components, as the basis of design.

4-3.6 **Frost Penetration.** Foundation walls, piers, and other permanent supports of structures shall be protected from frost as described in the International Building Code (reference AA). Determine the minimum design depth of building foundation below finished grade using the tables in UFC 3-310-01 (reference B). If a building location is not in the referenced tables, the frost line depth shall be determined from the best available regional information.

4-4 **SITE CONDITIONS & SOILS INVESTIGATIONS**. Soil Investigation Program. Conduct data collection, field surveys, and subsurface investigations in accordance with UFC 3-220-03FA (reference D) or Chapter 9 of UFC 1-300-09N (reference E). If arctic or sub-arctic construction conditions are present at the site, the program will address the provisions for building foundations contained in UFC 3-130-01 (reference F) and UFC 3-130-04 (reference G), respectively.

4-4.1 **Seismic Geologic Site Hazards**. Seismic geologic site hazards include surface fault rupture, soil liquefaction, soil differential compaction (or settlement), landsliding, and flooding. Use UFC 1-200-01 (reference A) and UFC 3-310-04 (reference C) to define requirements for seismic hazard screening.

4-4.2 **Site-Specific Seismic Ground Motion Study**. Use UFC 1-200-01 (reference A) and UFC 3-310-04 (reference C) to determine when a site-specific seismic ground motion study is required, and the required scope of the study. If a study is required, retain a qualified geotechnical seismic ground motion specialist to conduct these site-specific studies. Complete the study during the early preliminary stage of the soil investigation program so the results will be available during the structural system selection process.

4-5 **ADDITIONAL DESIGN CONSIDERATIONS**. Several aspects of structural design typically associated with medical facilities are addressed below. It is essential that structural design considerations enter into the earliest stages of concept planning and design, to assure compatibility with medical function, and the building architectural and equipment features.

4-5.1 **General**. All health care facility buildings must have a complete vertical and lateral force resisting structural system that provides a continuous and direct load path with members and connections that possess the strength and ductility to transmit all applicable design loadings to the foundation. This structural system shall be capable of withstanding design loadings while, (1) remaining within prescribed limits of strength, (2) maintaining deformation limits, and (3) providing adequate energy dissipation capacity.

4-5.2 **Structural System Selection.** The selection of the overall structural system shall consider the structural advantages and disadvantages of the particular system as well as the impact on functional and operational restrictions and the ability to accommodate future functional modifications.

4-5.3 **Open Area Concept**. Provide column-free functional areas as appropriate. Long-span structural construction usually increases functional area openness and flexibility. Although exceptionally long spans or special long span structural techniques are generally more costly (in terms of first cost), designers should give consideration to the life cycle cost benefits provided by the additional flexibility.

4-5.4 **Vibration**. The vibration response of the structure requires special consideration. Designs must consider the vibration potentials of floor and roof framing and floor systems, and the overall structure, to assure adequate isolation and damping of vibrations produced by HVAC equipment, emergency generators, elevator equipment, and other machinery and equipment. In addition to assuring a living environment free from distracting or annoying vibrations, designers must be aware of the requirements of vibration sensitive equipment, such as analytic scales, optical equipment, electronic equipment and X-ray machines.

4-5.5 **Critical Nonstructural Systems.** Certain nonstructural systems, and services will be required for the post-earthquake life-safety or operational performance levels of the health care facility, as addressed at Section 5 of this UFC. The structural design of the restraints and anchorages of these important nonstructural elements is an integral part of the structural design of the facility.

GOVERNMENT PUBLICATIONS

Reference	Government Publication	Document Title
A	UFC 1-200-01	General Building Requirements
B	UFC 3-310-01	Structural Load Data
C	UFC 3-310-04	Seismic Design for Buildings
D	UFC 3-220-03FA	Soils and Geology Procedures for Foundation Design of Buildings and Other Structures
E	UFC 1-300-09N	Design Procedures
F	UFC 3-130-01	General Provisions - Arctic and Subarctic Construction
G	UFC 3-130-04	Foundations for Structures - Arctic and Subarctic Construction

NON-GOVERNMENT PUBLICATIONS

Reference	Non-Government Publication	Document Title
AA	IBC - 2006	International Building Code
BB	ASCE 31-03	Seismic Evaluation of Existing Buildings
CC	ASCE 41-06	Seismic Rehabilitation of Existing Buildings
DD	ASCE 7-05	Minimum Design Loads for Buildings and Other Structures

SECTION 5

SEISMIC DESIGN

5-1 **INTRODUCTION**. This Section provides seismic design criteria for permanent military health care facilities. Seismic design requirements shall be based upon UFC 1-200-01 (reference A) and UFC 3-310-04 (reference B). The Occupancy Category of a structure shall be based on the nature of the occupancy as described below and in UFC 3-310-01 (reference C).

5-2 **HEALTH CARE AND DESIGN REQUIREMENTS**. The desired seismic level of performance for a particular health care facility is dependant on the nature of the occupancy and whether the structure is required for post-earthquake recovery. The Occupancy Category, as defined in the International Building Code (reference AA), is a function of the desired seismic performance level. The International Building Code and UFC 3-310-01 (reference C) define Occupancy Categories and describe various occupancies types within each category. In general Occupancy Category II represents a “life safety” performance level, Occupancy Category III represents a “Safe Egress” performance level, and Occupancy Category IV represents an “Immediate Occupancy” performance level when a structure is subjected to the design level earthquake. Occupancy Category V represents an “Immediate Occupancy” performance level when a structure is subjected to the Maximum Considered Earthquake, and is not appropriate for a health care facility. Occupancy Category V is only considered applicable for key National Defense assets, or facilities that would have catastrophic consequences if damaged.

The required performance level / Occupancy Category for a specific building or structure will be as directed by the the Design Agent and the Using Military Department Representative for a specific project. Certain health care facilities may require only key areas to be operational after the design level earthquake. Other health facilities may require only a life safety level of performance. Design requirements may also include the preservation of essential utility systems such as ventilation, electricity, water supply, waste systems, steam distribution, medical gases, vacuum, medical air, and communications that are necessary to support facilities that are required to remain operational following the design level earthquake.

Utility systems shall be designed to permit operation of the system in the event of damage, at a reduced capacity, by isolating and shutting off damaged areas.

5-3 **SEISMIC PERFORMANCE LEVELS.** The Design agent and the Using Military Department will determine the performance level / Occupancy Category required for a medical facility. The following levels of seismic performance are defined with respect to operational mission, disaster preparedness and medical post-earthquake needs:

5-3.1 **Life Safety Level (LS)**. This performance level, equivalent to Occupancy Category II, is the minimum required for a new occupied structure or for the renovation or seismic upgrade of an existing occupied health care structure. When subjected to the design level earthquake a structure designed to this performance level will sustain

damage to structural components but retain a margin against onset of partial or total collapse and reduce the likelihood of injury or death to personnel. It should be possible to repair the structure; however it may not be practical for economic reasons. With this level of design, the health care facility requires post-earthquake evacuation, with post-earthquake medical operations dependant upon outside assistance. No specific time is specified for re-occupancy and utilization for this class of structure.

5-3.2 **Safe Egress (SE)**. This performance level, equivalent to Occupancy Category III, may apply to either new or existing facilities. In this category, critical spaces, laboratories, radiology, CMS, supply storage, and Nuclear Medicine must be designed to continue in operation following the design earthquake. Fixed equipment, vertical transportation, and utilities shall be anchored/braced to resist seismic forces, and if damaged, be restorable within several days. Facilities with this design level will continue operation with outside assistance for inpatients and disaster victims with temporary expansion of emergency facilities.

5-3.3 **Immediate Occupancy (IO)**. This performance level, equivalent to Occupancy Category III, provides a higher level of seismic resistance capability than the "Safe Egress" level and should be applied to structures required for post-earthquake recovery operations following the design level earthquake. The risk of life-threatening injury as a result of structural damage is very low, and although some structural damage may occur, repairs would generally not be required prior to reoccupancy. All critical utilities and equipment must isolated and/or supported so the functionality can be maintained following the design level earthquake. Provision for temporary emergency connection or augmentation of potable water, sanitary sewers and fuel will be required. In existing facilities where upgrade of all portions of the facility is economically impractical, upgrade may be restricted to the more critical spaces and systems identified in the program authority document.

5-4 **POST-EARTHQUAKE EMERGENCY STATUS**. The disaster magnitude and the estimated duration of the post-earthquake emergency period must be reviewed and their impact on the operations of the facility assessed. The extent of curtailment, relocation, and expansion of services; the demands placed on on-site storage of potable water, fuel, sewage, and medical supplies; and the best design solutions to achieve and preserve functionality will be determined from these estimates.

5-5 **CONCEPT DESIGN DEVELOPMENT.** Seismic design will be functional and responsive to the normal operation of the facility. Because each facility is unique, specific project seismic design concepts for various facility and health systems shall be developed during concept design. The type of structural system to be used must be coordinated in the early concept development of the functional layout so that an effective, structurally efficient seismic resistance/performance type "system" is considered. Specific project criteria will include mechanical, electrical, medical gases and communication systems design criteria. See Section 4, Structural Design, for the functional and other operational items that must be considered during the development of the building layout and concept design and for the criteria that must be used in the structural design of the facility.

5-5.1 **Innovative Systems**. Both base isolation and passive energy dissipation are considered to be innovative seismic force resistant structural systems. Innovative

systems shall be considered for major health care facilities in high seismic risk areas, where the design spectral response acceleration at short periods (S_{DS}) is equal to or greater than 0.50g, or the design spectral response acceleration at 1-second periods (S_{D1}) is equal to or greater than 0.20g. The specific types of base isolation systems that are considered for use in health care facilities must have been researched, tested and proven to be acceptable, based on sound engineering principles and experience. Base isolation materials must be durable, i.e., have minor aging and temperature effects and have reliable, long term performance characteristics Selection considerations shall include a life-cycle cost comparison between a conventional, fixed base system and the base isolation system.

5-6 EVALUATION OF EXISTING FACILITIES

5-6.1 Seismic Hazards Evaluation Considerations

5-6.1.1 Seismic structural evaluations of existing buildings shall be done in accordance with UFC 1-200-01 (reference A) and ASCE 31-03 (reference BB). Seismic structural rehabilitations of existing buildings shall be done in accordance with UFC 1-200-01 (reference A) and ASCE 41-06 (reference CC).

5-6.1.2 Electrical Power. Electrical power will be assumed to be unavailable from public utilities following an earthquake. Determine the availability, capability and capacity of the alternate power source (on-site generator(s)) to provide the necessary power to operate the facility following an earthquake. Make particular notes of all pertinent characteristics of the alternate power source, with emphasis on capacity, mounting arrangement, starter reliability, fuel supply, age, and degree of automation. Also note the general vulnerability to earthquake-induced damage of the transfer switches, electrical distribution system, and items to be serviced by the alternate source power system.

5-6.1.2 Site Accessibility. Evaluate public access to the facility. Provide at least two separate on-site entrance roads to the facility, each preferably connecting to a different off-site public access road. Identify potential earthquake hazards to roads, bridges, overpasses, and retaining walls. Inspect the site to determine if a safe and reliable on-site space for emergency helicopter landings is within close proximity of the hospital buildings.

5-6.1.3 Facility Upgrade Report. Include all of the above considerations, along with the Structural Design system evaluation and the site hazards assessments, in a facility upgrade report (See Section 2)

5-6.2 **Final Evaluation**. Based on the review and approval of the seismic facility upgrade report, a final evaluation of the facility will determine the most satisfactory method to upgrade the seismic resistance to the prescribed criteria. Proposed solutions will be thoroughly analyzed and cost estimates prepared. As an alternate concept, a base isolation system may be considered to upgrade the seismic resistance of facility. Base isolation will limit the seismic forces transmitted to the super structure and minimize the seismic upgrade provisions for the non-structural elements. If considered, the base isolation requirements for new medical facilities apply.

5-7 **DESIGN OF NON-STRUCTURAL SYSTEMS**. The seismic restraint, protection, site-storage, and other design features and requirements addressed by the following criteria will be applicable according to the level of the seismic threat and the designated Occupancy Category of the facility.

All non-structural components permanently attached to structures, and all supports and attachments for non-structural components shall be designed and constructed to resist the effects of earthquakes in accordance with the International Building Code (reference AA) and with ASCE 7 (reference DD), with the exclusion of Chapter 14 and Appendix 11A.

5-7.1 **Identification of Essential Systems**. Table 5-1 common non-structural systems and system components that are typically present in health care facilities.

5-7.2 **Hazardous Materials**

5-7.2.1 Special Storage Provisions. Provide special storage equipment or accessories that are convenient for normal daily use, and functional after earthquakes. Examples of such equipment are lower profile shelves with face bars which restrain material on shelves and secure shelves to the wall or floor; specially designed racks for restraining reserve oxygen and nitrous oxide tanks; and special bins for storing anesthetic gas containers.

5-7.2.2 Fuel Gas Piping. Brace piping and provide shutoff valves. Use malleable fittings and valves, provide swing joints where necessary.

5-7.3 **Electrical Systems**

5-7.3.1 Vibration Isolation. Where vibration isolation is not required, bolt generators directly to an appropriate foundation. Where vibration isolation is necessary, provide restraining clips at vibration isolators to prevent failure of the isolation mountings under earthquake vibration conditions.

5-7.3.2 Generators. Where practicable, use generators with integral radiator cooling systems. Where auxiliary cooling systems are necessary, install cooling towers or remote radiators at grade level. Brace cooling towers or radiators and provide special bracing for piping.

5-7.4 **Mechanical Systems**

5-7.4.1 On-Site Sanitary and Water Storage Facilities. For any facility with a designated seismic protection level in excess of “Life Safety”, the following criteria shall apply.

a. Provide the water service with two independent connections to the water system. In addition, provide a water storage facility as a source of supply, sized to adequately meet fire and water demands during the post-earthquake emergency period. Design water mains to minimize

service disruption from earthquakes and to facilitate post-earthquake repair. Domestic water storage considerations may factor in a reasonably reduced level of water consumption for the emergency period of operation.

b. Provide an Emergency Sanitary Sewage Holding Facility for temporary retention of all sanitary sewage discharge from the hospital during the post-earthquake emergency period.

5-7.4.2 Fuel Gas Shutoff Valve. Equip the site gas supply line with a safety shutoff valve.

5-7.4.3 Flexible Piping Connections. Provide flexible connections for piping entering a building and at transitions where seismic activity could educe harmful differential displacement.

5-7.5 **Medical Systems and Equipment**.

5-7.5.1 Autoclaves**.** Anchor steam sterilizers.

5-7.5.2 X-Ray Equipment. Include bracing as required for the design of X-ray unit ceiling tracks. Anchor X-ray control consoles and automatic film developers.

5-7.5.3 Miscellaneous Equipment Considerations

a. Secure equipment or shelving not required to be moved from location to location to a partition. Equipment with doors should have a positive latching device that operates automatically when access to the equipment or shelving is not continuously required.

b. Blood bank, drug storage, critical refrigerators, freestanding incubators and centrifuges, should be secured.

c. Secure sequential multiple blood analyzers and other fragile laboratory equipment. Anchor related shelving, and provide lips and face bars as necessary.

d. Wheeled Equipment. Wheeled equipment should have wheel locks and should be assigned a specific location when not in use. Wheeled equipment should be provided with closets or alcoves, whenever possible, to limit rolling. Portable equipment should be stored in recessed cabinets which are secured to partitions, whenever possible.

5-7.5.4 Supply Storage. Supply cabinets should have either plastic or tempered glass in sliding doors, and the doors should slide closed automatically. Open shelving should have a shelf rim which precludes supplies being shaken from their storage position.

5-7.5.5 Medical Gas Bottles. Metal boxes attached to the floor and equipped with double chains should be provided for medical gas bottles. Wheeled carts carrying

oxygen or other medical gases should be equipped with wheel locks and chains for fastening to walls.

5-7.6 **Architectural Systems**.

5-7.6.1 Overhangs. Do not use unbraced overhangs, parapets, and balconies.

Table 5-1.
Nonstructural Systems

1. Fire Protection System
Sprinkler System
Risers
Distribution mains
Valves
Support hangers, bracing, and clamps
Extinguishers
Receptacles
Mounting brackets
Standpipes
Mains
Exits
Stairways
Doors
Corridors
2. Hazardous Materials
Hazardous Systems
Natural gas,O2, N2O
Risers
Distribution mains
Hangers
Hazardous Storage
Radioactive storage
O_2 Cylinders/Storage tanks

Table 5-1 (continued).
Nonstructural Systems

N_2O Cylinders
Chemicals, reagents
Anesthetic gases
Fuel
3. Alternate Source Power System
Transfer switches
Diesel-Generator
Fuel piping
Cooling System
Cooling tower
Pumps
Piping
Batteries
Controls
Switchgear
Substation
Distribution Panels
Motor Control Centers
4. Communications Systems
5. Transport Systems
6. Mechanical Systems
HVAC Systems
OR and DR
ICU and recovery
Nursery
Ductwork
Air handling units
7. Medical Systems

Table 5-1 (continued).
Nonstructural Systems

Fixed
Autoclaves
X-ray
Film developers
Sequential multiple analyzer
Casework and exhaust hoods
Portable
Freestanding or wheels
Dialysis units
Appliances
Laboratory/medical equipment
Medical monitoring equipment
Beds, food service units, stretchers, carts
Medical Stores and Supplies
Medications and Drugs
Chemicals
Instruments
Linens
General supplies
Medical Records
8. Architectural Systems
Lighting Fixtures
OR, DR, emergency
Partitions, Ceilings and Walls
Ornamentation
Office Equipment
Operation Blocking Hazards
Emergency lighting/batteries

Table 5-1 (continued).
Nonstructural Systems

Surgical
Personnel hazards
Glazing and Fenestration
Storage Racks, Bins, Lockers
Egress corridors
Maintenance/Repair Stores and Supplies
Maintenance/repair parts
Housekeeping supplies
Emergency tools
9. Special Equipment
Proximity to Critical Equipment
Expensive Equipment
Non-Emergency Power
Sewer
Kitchen Equipment
Laundry Equipment

GOVERNMENT PUBLICATIONS

Reference	Government Publication	Document Title
A	UFC 1-200-01	General Building Requirements
B	UFC 3-310-04	Seismic Design for Buildings
C	UFC 3-310-01	Structural Load Data

NON-GOVERNMENT PUBLICATIONS

Reference	Non-Government Publication	Document Title
AA	IBC - 2006	International Building Code
BB	ASCE 31-03	Seismic Evaluation of Existing Buildings
CC	ASCE 41-06	Seismic Rehabilitation of Existing Buildings
DD	ASCE 7-05	Minimum Design Loads for Buildings and Other Structures

SECTION 6

ENERGY AND WATER CONSCIOUS DESIGN

6-1 **GENERAL**. Comply with UFC 3-400-01, Design: Energy Conservation (reference 6a) and E.O. 13423 (reference 6b).

REFERENCES:

6a. UFC 3-400-01, Design: Energy Conservation.

6b. Executive Order 13423, Strengthening Federal Environmental, Energy, and Transportation Management, latest edition.

SECTION 7

HEATING, VENTILATION AND AIR CONDITIONING (HVAC)

7-1 **GENERAL**. This section provides HVAC design requirements for DoD medical, dental, medical training, and medical research facilities. The primary requirement of the HVAC system(s) in a medical facility is the support of medical function and the assurance of occupant health, comfort, and safety. The HVAC system functions not only to maintain minimum requirements of comfort and ventilation, but is an essential tool for the control of infection, removal of noxious odors, dilution and expelling of contaminants, and establishment of special environmental conditions conducive to medical procedures and patient healing. Subject to the above, appropriate consideration shall be given to the HVAC design to ensure system maintainability, economics and energy efficiency, and adaptability to future facility modification or expansion.

7-1.1 **Applicability**. This criteria applies to new and existing medical facilities including hospitals, medical and dental clinics, veterinary clinics, medical supply warehouses, medical training facilities, and medical research laboratories. Applicability to existing facilities is restricted to upgrade or replacement projects, and for those specific systems or services included in the scope of the project authorization. For existing facilities, when complete compliance with the technical criteria of this section is not economically practicable, consideration shall be given to substitution of other recognized industry standards or criteria upon application to TMA/PPMD as provided under Section 2 of this document. All facilities shall comply with the applicable standards of the National Fire Protection Association (NFPA).

7-1.2 **Supporting Documents**. This guidance may be supplemented by the individual military departmental publications, including Architect-Engineer Instructions (AEIs), Technical Manuals (TMs), Engineering Technical Letters (ETLs), project-specific design instructions, and other criteria. Minimum HVAC design criteria shall be in accordance with the latest editions of the American Society of Heating, Refrigerating, and Air Conditioning Engineers (ASHRAE) publications (reference 7a), the American Council of Government Hygienists (ACGIH) Publication "Manual of Recommended Practices for Industrial Ventilation" (reference 7b), and the National Fire Protection Association (NFPA) Standards (references 7c, 7d, 7e, 7f, 7g, and 7h), as well as applicable governmental regulations. Other industry and government standards shall be utilized for HVAC design as referenced herein.

7-2 **DESIGN CONDITIONS**.

7-2.1 **Weather Data**. Weather data shall be obtained from UFC 3-400-02, “Design: Engineering Weather Data” (reference 7i). If given military installations have access to more recent or accurate information of weather conditions in their region, designers shall coordinate use of this information with the service design agent.

7-2.2 **Interior Design Conditions**. Interior design conditions shall be in accordance with Appendix A.

7-2.3 **Space Ventilation**. Minimum total and outside air change rates shall be as indicated at Appendix A; Computed on a per-occupant basis, minimum outside air ventilation shall meet the worst-case requirements of either appendix A, or ASHRAE Standard 62.1. Higher air change rates may be required to meet air conditioning or makeup air requirements as supported by engineering calculations. See 7-16 of this Section for additional guidance and requirements.

7-2.4 **Ambient Design Dry and Wet Bulb**. The HVAC cooling design for facilities housing critical care and other inpatient services shall be based on the 0.4% Dry Bulb (DB), and corresponding Mean Coincident Wet Bulb (MCWB) temperatures, and winter heating design shall be based on the 99.6% DB. Cooling towers shall be designed on the basis of the 0.4% dew point temperature. Clinical facilities shall in general be designed to the 1.0% DB/MCWB temperature for cooling, and 99% level for heating. Cooling towers shall be designed on the basis of the 1.0% Wet Bulb temperature.

7-2.5 **Critical Care Spaces**. Critical Care Spaces are identified in Section 9, Electrical, of this document.

7-2.6 **Sensitive Spaces**. Sensitive areas include Automated Data Processing (Computer) rooms, Radiology and MRI computer rooms, selected laboratories (see below), and Telephone Switch Room. Other rooms housing sensitive electronic or other equipment or processes may be designated as Sensitive Areas on an individual project basis. Design ambient temperatures shall generally be the 0.4% DB/0.4% MCWB (summer), and 99.6% DB (winter). Each application should consider using 1.0% DB/1.0% MCWB (summer), and 99% DB (winter) design conditions for less critical equipment/process air conditioning requirements.

7-2.6.1 Laboratories. Space design temperatures for laboratories are indicated at Appendix A, generally 26ºC (78.8ºF). However, designers shall be responsible to coordinate with the equipment designer and user to establish whether temperature-sensitive equipment is expected to be utilized in a laboratory space. When such equipment requires, for proper operability or to meet warranty limitations, an ambient temperature lower than can be maintained by the HVAC/Control System when set at 26ºC (78.8ºF), the designer shall coordinate with the Design Agent to establish a reasonable lower design temperature for that space.

7-2.7 **Temperature during Smoke Control Operation**. When a supply air system is required to operate on 100% outside air during smoke mode operation, the system shall be designed with sufficient heating capacity to maintain a minimum of 45 degrees at the air handling unit discharge under the 99.6% winter design conditions.

7-2.8 **Mechanical Equipment Rooms**. In general, mechanical equipment rooms shall be designed with ventilating systems which will maintain temperatures within 5.5C of summer ambient design temperature. However when these equipment

rooms house temperature-sensitive electronic components, such as microprocessor based controls, electronic circuit breakers, etc., designers shall confirm the ambient requirements of such equipment and design accordingly. In humid climates, mechanical rooms which are contiguous with the occupied building shall be conditioned to a humidity level equivalent to the occupied areas, to minimize transfer of moist, unconditioned air to the interior of the building.

7-2.9 **Humid Climate Definition**. A humid climate, as referenced in this Section, is a region with 4,500 or more cooling degree days (50ºF basis) that receives 20” or more of annual precipitation.

7-3 **REFRIGERANTS**. Refrigeration equipment shall utilize refrigerant having an Ozone Depletion Potential (ODP) of not greater than 0.0 (refer to the EPA Significant New Alternatives Program (SNAP) for acceptable refrigerants). Refrigeration room design shall include the safety features, such as sensing devices, purge ventilation system, etc., as required for the particular refrigerant in accordance with ASHRAE Standards 15 and 34 (references 7j and 7k).

7-4 **LIFE-CYCLE-COST/ENERGY ANALYSIS**. Life cycle cost and energy analysis required in conformance with this Section, or necessary for the evaluation of building sustainability features or performance, shall be in accordance with criteria referenced at Section 6.

7-5 **ELIGIBILITY FOR AIR CONDITIONING**.

7-5.1 **Total Air Conditioning**. Air conditioning is *required* in all normally-occupied facilities and spaces in which the interior conditions listed in Appendix A cannot be met through natural ventilation alone. “Normally occupied spaces” will include such spaces incidental to medical facilities as corridors and circulation areas. Normally unoccupied, or intermittently occupied, spaces such as restrooms, locker rooms, soiled linen rooms, janitors closets, and similar spaces accessible to medical staff or the public and having exterior exposure shall be air conditioned (in addition to being provided with the required ventilation) to maintain reasonable conditions.

7-5.2 **Food Service Area**. Air conditioning of the kitchen areas shall be designed to avoid the waste of energy. Designs shall consider utilizing dining room transfer air or tempered make-up air for vented equipment exhaust, spot cooling, exhaust system heat recovery, and other energy saving strategies to minimize energy costs while providing a *reasonably* comfortable environment for kitchen staff.

7-5.3 **Not Authorized Air Conditioning**. In non-humid climates, the following areas shall not be provided with air conditioning. Heating and/or ventilation shall be provided as required to meet criteria.

a. Motor Vehicle Storage Area
b. Energy (Boiler/Chiller) Plants
c. Mechanical Equipment Rooms, unless containing sensitive electronic equipment requiring temperature control.

d. Toilets/Showers and Locker Rooms not located with outside exposure. Note that locker rooms which do not include a shower room or toilet may be recirculated.

7-5.4 **Medical Warehouses**. HVAC design shall be based upon the environmental requirements of the stored materials. Spaces within medical warehouses which will be normally occupied, including Administrative or Break rooms, shall be air conditioned as required to provide the design conditions listed in Appendix A. Air conditioning will also be required for any warehouse spaces housing computer or other environmentally sensitive equipment.

7-6 MECHANICAL EQUIPMENT SPACE.

7-6.1 Mechanical rooms for major air handling equipment, heat exchangers, prime movers, medical gas supplies, vacuum/air compressors, and other major mechanical equipment shall generally be located within the facilities with access to the outside of the building. Exceptions to locate equipment in penthouse equipment rooms may be considered by the Design Agent if justified from a cost or functionality standpoint and if properly coordinated with the base/post engineers. Rooftop mounted air handlers should be avoided due to the difficulty of maintenance access, and consideration of safety and working conditions for O&M personnel. Mechanical room location and layout shall consider:

a. Sufficiency of space to enable access for operation, maintenance, and replacement of equipment.

b. Minimization of distribution runs.

c. Relative location to electrical equipment rooms: NEC vertical clearance/dedicated space requirements for electrical equipment will restrict or preclude the routing of piping and ductwork through these locations.

d. Relative location to communication rooms: adjacency of fan and communications rooms will create congested above-ceiling conditions where cable trays and ductwork converge.

e. Adjacency to corridors, as a path for the routing of ductwork.

f. Adjacency to spaces having stringent noise control requirements, or spaces with high ceilings which may restrict duct distribution space.

g. Potential future expansion of mechanical system capacity.

7-6.2 Chilled water and steam/hot water generators may be located in a separate energy plant. Utility lines connecting the energy plant to the facility shall be installed in a tunnel or other *accessible* enclosure providing maintenance access and protection from the elements.

7-7 **HVAC SYSTEM DESIGN FOR FUNCTIONAL AREAS**. For HVAC design, a medical facility can be considered to contain six general areas including Critical, Sensitive, Clinic, Administrative, Support areas, and Patient Bedroom areas. The primary considerations of the HVAC design are to provide the environmental conditions required to meet the functional requirements. Multizone, dual-duct, terminal reheat, variable air volume, and combinations of such air distribution systems may be considered for application in appropriate areas. If utilized, VAV systems will be of the minimum air quantity type. Furthermore, Direct Expansion (DX) coils shall not be used in Variable Air Volume systems. All-water, unitary, and fan-powered VAV systems will generally not be acceptable in medical facilities, due to their limitations in meeting ventilation requirements, increased contamination source potential, or increased maintenance requirements.

7-7.1 **Critical Care Spaces**. These spaces will normally be served by single duct terminal reheat or double duct systems. Simultaneous temperature, humidity, *and pressurization* control requirements for these spaces preclude the use of other types of systems.

7-7.1.1 Operating & Delivery Room (OR and DR) Air Systems. The room air supply system for Operating Rooms, Delivery Rooms, Cardiac Catheterization (hospital) Rooms, and Cystoscopy (hospital) Rooms shall be a ceiling supply type, located over the operating table or treatment area, using non-aspirating "low velocity" (0.2 - 0.41 m/s)(40-90 fpm) diffusers that isolate the air over the operating or treatment area. Room exhaust/return provisions shall consist of a minimum of two exhaust or return registers, located at diagonally opposing corners of the room, mounted with bottoms of registers between 150 mm (6 in) and 230 mm (9 in) above finished floor. The HVAC system for anesthetizing locations, including operating and delivery rooms, shall be designed in accordance with NFPA 99 to (a) prevent recirculation of smoke originating within the surgical suite and (b) prevent the circulation of smoke entering the system intake, without in either case interfering with the exhaust function of the system.

7-7.1.2 Continuity of Service. The design for the HVAC systems serving Critical Care spaces shall include the following:

a. The Air Handling Unit(s (AHUs) serving Operating or Delivery Room suites shall be separate, independent units serving only the respective Surgical or Obstetrical Department or portions thereof, to enhance the reliability of these systems and minimize demand on the emergency power system. The air handling unit(s) serving each suite may also provide service to other Patient Care or support areas outside the respective Surgical or Obstetrical Department. A maximum of four ORs or four DRs should be served by any single AHU. Where a facility has four or fewer ORs, these should be served by at least two separate air handling systems, to enhance reliability; a similar consideration should apply for DRs.

b. HVAC equipment, including controls, which serve Critical Spaces (including ventilation and pressure controls for isolation bedrooms)

shall be connected to the emergency electrical power system. This shall include a sufficient number of chillers and boilers, with necessary supporting equipment, to meet critical design loads. Boilers shall have dual-fuel burners that are not solely dependent on one source of fuel for ignition.

c. Designs shall include features to minimize HVAC service interruptions to Critical Care spaces, without the provision of redundant air handling units or distribution systems. Provisions shall be such that service interruption to any Critical Care space, as a result of failure of an air handling unit component or its supporting electrical or controls systems, shall be minimized. Such features may include the provision of multiple, isolatable, heating and cooling coils, spare stock of replacement motors, drive belts, and bearings in the immediate vicinity of the equipment room, dual fan units, "manifolded" ductwork connections between AHUs, or other measures providing for continuity or expeditious restoration of service.

d. Air Handling Units, with associated controls, which serve critical care spaces and patient bedrooms shall be connected to the electrical emergency power system.

7-7.2 **Sensitive Areas**. These are spaces or areas in which equipment or processes may require special environmental control, including continuous (24 hours per day, year-round) air conditioning and individual room temperature and/or humidity control. Economic or operational considerations normally dictate provision of independent air conditioning systems for Sensitive Areas, to enable continuation of air conditioning when main building systems are shut down for repairs, or are operating in night setback or economizer mode. Minimum outside air ventilation shall be provided in normally occupied areas. For those sensitive spaces critical to continued hospital function and which require continuous cooling to remain in operation, appropriate backup or redundant features shall be provided to assure continuity of air conditioning in the event of primary air conditioning equipment failure. This may include the requirement for connection of air conditioning equipment to the emergency power system.

7-7.3 **Administrative Areas**. Administrative areas may be served by single duct reheat, multi-zone, VAV, or dual-duct systems, with perimeter radiation when required or advantageous.

7-7.4 **Outpatient Clinics**. Outpatient clinics may be served by single duct reheat, dual-duct, VAV, or multi-zone systems. Multi-zone systems may only be employed if the following conditions are considered: 1) ease of mechanical room duct egress, 2) no large disparity in zone size or load profile, 3) little likelihood of space repartitioning or rearrangement, and 4) proximity of space served to the mechanical room.

7-7.5 **Support Service Areas**. Support service areas may be served by single duct reheat, dual-duct, VAV, or multi-zone systems.

7-7.6 **Patient Bedrooms**. Normal-care Patient bedrooms may be served by dual duct, multi-zone, VAV, or single duct reheat systems. All systems utilized shall maintain minimum ventilation quantities under all conditions of operation. Perimeter radiation systems (radiant panels) may be considered in conjunction with these air systems. Fin-tube heating systems shall not be used in patient bedrooms.

7-7.6.1 Patient Isolation Bedrooms. Isolation bedrooms shall be served by airflow systems which maintain a constant differential between supply and exhaust air flow rates to maintain the required relative pressurization of the space to the adjacent spaces and corridor. Refer to more detailed design guidance and requirements for isolation bedrooms under section 7-17 of this document. Pressurization control equipment serving Protective Isolation and Disease Isolation Bedrooms shall be connected to the emergency electrical power system.

7-8 GENERAL DESIGN CONSIDERATIONS.

7-8.1 **Plant Sizing and Optimization**. For all facilities justifying a degree of redundancy in the capacity of primary energy plants, the precise number, capacity, and configuration of primary heat exchangers and pumps shall be determined in accordance with the following requirements.

7-8.1.1 Facilities with Critical Environments. These facilities include all medical facilities with inpatient functions, and for selected Research and Vivarium facilities in which loss in ability to condition the facility would result in loss of critical research or animals at prohibitive cost to the government. The plant shall be sized and configured such that:

- For inpatient medical facilities, with one major heat exchanger or pump out of service, the remaining plant equipment is sufficient to serve all critical loads, including patient bedrooms and labor rooms, plus one half of all remaining loads within the facility.
- For Research and Vivarium facilities, with one major heat exchanger or pump out of service, remaining capacity shall be sufficient to serve the critical environmental loads, plus all support spaces, such as computer records, critical to the continued operation of the facility. This will not include routine office, conference, classroom, or administrative areas.
- For all facilities with critical environmental requirements, with one major heat exchanger or pump out of service for an extended period (one day or more) of maintenance, during the “off” season for such service, the remaining plant equipment shall be sufficient to meet the entire facility’s maximum load.
- For all such facilities, plant optimization shall in addition be based on life cycle cost analysis of the most life-cycle economical number, capacity, and configuration of prime heat exchangers and pumps.

7-8.1.2 Energy Plants for Outpatient Clinics. When energy plants consisting of multiple primary heat exchangers are justified, on a project by project basis, for large Outpatient Clinics, the plant shall be designed on the basis of life cycle cost analysis of the most life-cycle economical number, capacity, and configuration of prime heat exchangers and pumps.

7-8.2 **Contaminant Removal**. HVAC systems shall be designed to remove or reduce to acceptable levels volatile chemical and airborne microbiological contaminants within the facility. Systems shall be designed to remove excessive moisture in facility spaces and to control moisture and dust accumulation in air handling units, distribution elements, and chases, to avoid conditions permitting the growth of pathogenic, allergenic, or otherwise objectionable microorganisms.

7-8.3 **Interdepartmental Air System Restriction**. In general, individual facility departments should be served by dedicated air handling systems in order to increase system flexibility, energy conservation, facilitate comfort control, and reduce demands upon the emergency power system.

7-8.4 **Air Filtration**. Individual space air filtration shall be provided as indicated at Appendix A. MERV 8 "roughing" filters shall be provided upstream of all coils, velocity sensing devices, or other devices requiring protection from dust accumulation. “Roll filters”, cleanable media, or other filtration systems requiring more intensive maintenance should be avoided. Designers shall carefully consider the location of filters relative to humidifiers to minimize the possibility of wetting the filter media. Use of bag type filters should be avoided for critical care spaces due to the propensity for bag filters to release particles during air handler startup/shutdown.

7-8.5 **Balancing Ports and Features**. Necessary controls, instrumentation, and balancing ports and devices shall be provided to establish and maintain the required space temperature, relative humidity, and air changes rate, and to facilitate balancing procedures for all systems.

7-8.6 **Additions and Alterations to Existing Facilities**.

7-8.6.1 Site Investigation**.** Designers shall conduct thorough investigations of existing facilities to be upgraded or modified, to become knowledgeable with facility conditions, as established by the terms of their design contracts. This includes the need to inspect concealed spaces (above-ceiling plenums, equipment rooms, chases, etc.) to permit evaluation and accurate depiction of as-built conditions which can affect new work. Design agents shall assure that this requirement is met; it is advantageous that the expected scope of the site investigation be discussed in detail with the designer during project prenegotiation and “kickoff” meetings. Generally, designers should be required to directly inspect all equipment rooms and all above-ceiling areas in such a number of locations as to reasonably establish the existing conditions. In facilities with “hard” ceilings, this may require the creation of a suitable number of inspection openings: design agents shall define in Project Design Instructions the responsibility for making and repairing such openings. Structural and architectural building elements, as well as existing equipment, that restrict equipment distribution

space should be directly verified to the extent reasonably practicable. The design team must recognize the economic advantages of a detailed designer site investigation: if the designers do not verify conditions, the construction contractor must do so, normally at a cost premium reflected in higher bidding costs (unknown conditions) and change orders (changed conditions).

7-8.6.2 Modifications to Existing Systems. Too often in the past, addition/alteration project design documents have failed to provide the detailed engineering guidance required to sustain operation of systems serving occupied areas, leaving this engineering responsibility in the hands of QA personnel or construction contractors. The results have included loss of critical services, inadequate system performance, project completion delays, and costly change orders. Therefore it is hereby emphasized that it is the responsibility of the project designer to carry out all aspects of the design which can reasonably be accomplished during the design phase. Modifications to existing equipment and systems, including temporary connections, changes to system performance, or measures necessary to sustain service, shall be shown and described in detail in project design documents. Designers shall evaluate the impact on existing systems of extensions of service which increase system demand. The locations of new connections shall clearly be shown and/or described. The designer shall determine, and document for the design agent's information, any project work which will necessitate a reduction or interruption of any service to an existing, occupied area

7-8.6.3 Protection of Patients From Construction Contaminants. For additions or alterations to existing hospitals, measures shall be provided to minimize contamination of existing hospital areas, during the construction period, and the associated HVAC systems serving them. Measures to reduce the potential of contamination and nosocomial infections include but are not limited to negative isolation of construction areas, construction of effective dust barriers (including double barrier air locks at entrances and exits) separating construction from occupied areas, protection of air distribution systems serving occupied areas, and disinfection of any reused ductwork. Designers shall consult with the facility's infection control representative during the design process to assure thorough coordination of design features that may affect patient welfare. See also the Sheet Metal and Air Conditioning National Contractors Association (SMACNA) IAQ Guideline for Occupied Buildings Under Construction.

7-8.6.4 Construction Phasing Plan. Designers shall develop a phasing plan, consisting of detailed written instructions as well as any graphic/drawing aids necessary to clearly communicate the content, location, and sequence of work activities. The plan shall identify the scope, duration, and timing sequence of each individually identifiable work item, with all required lead-in, preparatory, and commissioning activities.

7-8.6.5 Commissioning Considerations. More so than in new, stand-alone facilities, off the shelf guide specifications fall short of providing for all of the required commissioning procedures. In particular, designers shall show and specify the procedures required for interim, as well as final, commissioning for systems

constructed (or altered) and placed in operation segmentally.

7-8.7 **Cooling and Heating Load Calculations**.

7-8.7.1 Heating Load Calculation. Calculations used for determination of primary and airside (including reheat) heating equipment should not include credit for internal load sources, including lighting, people, and equipment. These loads are typically not present, or are much reduced, at night and on weekends. Heat calculations should also take into consideration morning warmup loads when night setback temperatures are utilized in non-ward areas.

7-8.7.2 Equipment Heat Generation. In many spaces within facilities, the primary component of cooling loads will be equipment heat generation. It is therefore necessary for accurate load determination that the HVAC designer coordinate on a project-by-project basis with the equipment designer, and with the individual Using Agency, to identify all individual equipment items and the corresponding load contributions. To estimate equipment usage duration and frequency, designers shall gather information from the Using Military Department, or if unavailable from that source the manufacturer, personal experience, or other sources. Determine average heat output from manufacturer's information. In performing load calculations, designers shall consider the as-designed equipment provisions of each unique space. "Rules of thumb" loading assumptions are not acceptable for final design calculations.

7-8.7.3 Lighting Loads. Lighting loads present a significant component of medial facility cooling loads and as such require consideration of the as-designed lighting fixture numbers and characteristics of each space. "Rules of thumb" lighting load assumptions are not acceptable as the basis for final design load calculations.

7-8.7.4 Envelope Components. Minimum insulation values for building envelope components shall be in compliance with UFC 3-400-01 (reference 7p). U-value calculations shall take into consideration the "fin effect" of metallic elements of wall and roof construction, as for example the effect of steel studs in walls which may as much as halve insulating effectiveness of batt insulation.

7-8.8 **Piping Systems**.

7-8.8.1 Pipe Routing. Piping distribution systems should be routed above corridors whenever practicable, to minimize leaks, maintenance intrusion, and noise in occupied areas of the medical facility. Pipes shall not be routed through telecommunications rooms per ANSI/EIA/TIA-569-A (reference 7u).

7-8.8.2 Thermal Expansion. Designers are responsible for designing all aspects of piping systems necessary for the control of thermal expansion, and for showing the necessary control features on design drawings. This includes showing and dimensioning as applicable, the approximate locations of guides, anchors, expansion ells and offsets, and flexible couplings, as well as any other piping features which may affect expansions forces in the piping. The intent of this requirement is to assure that

this critical aspect of piping design is accomplished by the qualified mechanical engineer selected for the project design, and not by a construction contractor of unknown engineering ability or qualification. In the case of direct-burial (i.e., pipe within a pipe) underground heat distribution systems, engineering of the expansion compensation features by the system manufacturer may be preferred or necessary. Designers shall design piping systems such that piping expansion forces are isolated from equipment. Design Agents shall provide that contractor's shopdrawing layout drawings of hot piping systems are reviewed by the designer or by an equally competent engineer representative of the government.

7-8.8.3 Steam and Condensate Piping**.** Steam in excess of 20 psig shall not be distributed in above-ceiling areas of a medical facility, or in utility corridors or chases adjacent to normally occupied spaces unless substantial concrete, masonry, or metal protective barriers are provided. Designers shall show the required direction and degree of line slope on drawings, and shall provide and show the locations and details of drip traps and other drainage features.

7-9 HVAC SYSTEM CONTROLS

7-9.1 **Energy Conservation**. All designs shall comply with UFC 3-400-01 (reference 7p). Additional information of Energy conservation design is referenced at Section 6 of this document.

7-9.2 **Temperature Control**. Individual room temperature controls shall be provided for all Critical spaces, Sensitive spaces, Patient Bedrooms, Labor Rooms and Laboratories, to closely maintain the room conditions provided at Appendix A. Zoned temperature control shall generally be utilized for other spaces within the facility. Only rooms with similar exposures and load profiles shall be served by a single zone. All conference rooms, classrooms, and other rooms with unique exposures or load profiles shall be served by a single zone. All variable volume terminal controllers serving normally occupied spaces shall be provided with a means of reheat, if a separate means of room heating (such as perimeter heating) is unavailable.

7-9.3 **Control Precision**. Temperature controllers shall maintain space temperature within +/- 1.1 ^{o}C (2 ^{o}F) of design setpoint, as provided for the individual spaces at Appendix A. The summer and winter design setpoints normally differ. For some spaces, a temperature range is given as the summer, or winter, interior design condition in lieu of a specific temperature setpoint. The HVAC system for such spaces shall be designed with the capability, under design conditions, to maintain any selected temperature within that range.

7-9.4 **Humidity Control**.

7-9.4.1 Humidity controls shall be provided as necessary to meet the requirements given for individual spaces at Appendix A. Humidity controls shall be provided on a room basis for the following critical spaces:

- Operating Rooms

- Surgical Delivery Rooms
- Cystoscopy Rooms

Humidity controls for all other spaces may be provided on a zone or system basis as determined to be sufficient to maintain the required conditions. Note that for spaces for which precise relative humidity requirements are not stated, humidity controls may be required to maintain an envelope of 30% to 60% RH during normally occupied hours; for such spaces, designers shall determine the likely interior RH, based upon outside air conditions and interior latent loads. Humidifiers are problematic from a maintenance standpoint, and should not be utilized except when analysis indicates that RH will drop below 30% for significant amounts of time.

7-9.4.2 Humidifying Equipment. Air handling system humidification shall be achieved utilizing direct steam injection, with a steam source in accordance with 7-10.1. Designers are responsible to designate the location of steam injectors relative to ductwork and air handling unit components, and so design them as to minimize concerns with moisture collection in/on the downstream elements. Provide a minimum of 3 M (10 ft) of straight ductwork, with no takeoffs, reducers, duct lining, or other components, immediately downstream of the injection location; If this separation space is not available, the design engineer shall provide a detailed design, considering duct dimensions, airflow velocity and psychrometric condition, and number and location of injection orifices, with necessary instructions to the construction contractor, to maximize the probability of moisture reevaporation before impact with downstream elements.

7-9.4.3 Trim Humidification for Critical Spaces. Humidifier shall be separated a minimum 4.5 M upstream from high efficiency final filtration; when this separation cannot practicably be achieved, a detailed design for the humidifier shall be provided as addressed at 7-9.4.2.

7-9.5 **Direct Digital Controls (DDC)**. The Direct Digital Control System shall be a complete system suitable for the control of the heating, ventilation and air conditioning system and other building level systems as specified. When a Using Agency determines that communication between a facility's DDC system and a remote Utility Monitoring and Control System (UMCS) is required, the design shall assure that the DDC system is seamlessly compatible with the UMCS system.

7-9.5.1 Utility Monitoring and Controls Systems (UMCS). No remote UMCS system (i.e., not located in the medical facility or its associated energy plant) shall be permitted to exercise control over any hospital HVAC system equipment providing service to Critical Care Spaces. Remote UMCS systems may be provided with monitoring, alarm, and reporting capabilities as necessary to facilitate maintenance activities.

7-9.6 **Air Handling Equipment Control**

7-9.6.1 Building Pressure Control. All systems shall maintain the building at relative positive pressure to the outside environment, with the exception of those

spaces on perimeter walls required to maintain a negative pressure relative to contiguous spaces. For facilities in humid climates, and for all facilities of three stories or more in height, automatic controls shall be provided to actively monitor and control building pressurization via pressure monitoring at strategic locations on each level, and manipulation of outside air and/or exhaust volume flow rates. All systems which modulate outside air, including all VAV air handling systems, shall include accurate airflow measurement arrays located in accordance with manufacturer's recommendations as part of their control system.

7-9.6.2 VAV Air Handling Unit Controls. All VAV systems shall be provided with supply and return fans, with economizer operation where required and where economically life cycle cost effective. Fan speeds shall be modulated by means of variable speed drivers (VFDs). Supply fans shall modulate based upon maintaining a fixed static pressure at a location remotely located in the ductwork sufficient to assure operation of all VAV terminal devices. Supply, return, and outside airflow rates shall be measured by the DDC control system, and the return fan shall modulate to maintain a fixed differential airflow below that of the supply fan. A high supply duct static sensor and shutdown capability shall be provided.

7-9.6.3 Variable Exhaust Controls. HVAC controls for laboratories, treatment rooms with coughing booths, autopsy procedure rooms, and other rooms having equipment requiring variable or intermittent exhaust requirements, shall be provided which maintain the required room relative pressurization and room conditions for all modes of operation of the equipment (i.e., on or off, minimal to maximum sash height, etc.), according to the User's intended operation. Variable flow controls shall be provided for the general exhaust of such rooms, as well as for the equipment, to allow measurement and tracking of supply to exhaust flow differential by the DDC system.

7-10 STEAM SYSTEMS.

7-10.1 **Humidification Steam Source**. Steam generated by heating system boilers, (or any other steam) containing harmful concentrations of amines or other treatment chemicals, shall not be used for space humidification. Separate steam generators for humidification shall be provided. If authorized by Design Agent, central steam systems utilizing chemicals safe for human respiration (controlled within allowable limits) may be considered. The design shall include provisions to minimize the effects of system corrosion resulting from the heating of undeoxygenated water.

7-10.2 **Sterilizer Steam Source**. Steam generated by boilers located in an on-site (hospital-dedicated) boiler plant may be utilized for sterilization steam subject to approval by the individual military department. As hospital authorities cannot normally exercise a reasonable degree of supervision or control over treatment chemicals utilized in base-wide or district systems, steam from these sources may not be utilized for direct sterilization. Unlike humidification steam, which is injected directly into the air supply, little sterilizer steam will escape into a facility's general environment. Under a reasonably responsible boiler treatment program, any steam which does escape will not result in dangerously high levels (OSHA RELs, etc.)of treatment chemicals in the environment.

7-10.3 **Designer Qualifications**. Projects involving the design of extensive medium or high pressure steam systems require the services of engineers highly experienced in this specialty. Too often, experience has shown that mechanical designers unfamiliar with steam system design err in the design of expansion compensation, condensate collection and handling, and equipment selection. Design Agents must insist on proper qualifications for designers of these systems.

7-11 AIR HANDLING AND DISTRIBUTION.

7-11.1 **Air Handling Unit Considerations**. Air handling units are to be double wall, internally-insulated, readily maintainable units suitable for utilization in medical facilities. Draw-through units are normally preferred, to utilize fan heat to increase the dry bulb air temperature above the saturation point and minimize the possibility of wetting downstream filters, attenuators, or other components. Provide for access doors immediately upstream and downstream of all coils, to facilitate cleaning and proper installation of the unit freezestat.

7-11.2 **System Shutdown Capability**. To the extent practical and cost effective, non-critical, *non-bedroom* area HVAC systems shall be designed to permit shutdown (night setback/setup, outside air shutdown) of individual areas or departments not in operation on a 24-hour basis. *Ventilation of toilets, battery vaults, and other normally-exhausted spaces shall be continued without interruption as warranted.*

7-11.2.1 Air distribution systems shall comply with the requirements in UFC 4-010-01 (reference 7v).

7-11.3 **Outdoor Air Intakes**. Outdoor air intakes shall be located as far as practical, but not less than 9000 mm (30 ft), from exhaust outlets of ventilation systems, cooling towers, combustion equipment stacks, medical/surgical vacuum systems exhaust, plumbing vent stacks, emergency generator exhaust, or from areas which may collect vehicular exhaust and other noxious fumes. Locate the bottom of air intakes serving central systems as high as practical but not less than the distance above ground level required by UFC 4-010-01 (reference 7v), or if installed above the roof, at least 900 mm (3 ft) above roof level. Outdoor air shall not be drawn from equipment rooms. Designers must utilize judgment in the location of contaminant exhausts, and not simply apply the “9M rule” without further consideration of wind direction and velocity, building geometry, and characteristics of the contaminant stream. Appropriate consideration shall be given to prevailing wind direction, summer and/or winter as applicable; however designers are cautioned not to rely on prevailing wind direction(s)as a primary factor in the avoidance of intake contamination. In particular, use extreme caution in locating outside air intakes in proximity to parking areas, ambulance garages, loading docks, exhaust air outlets, and equipment stacks. Where appropriate, Design Agents will provide in individual project design instructions for special computational fluid dynamics (CFD) or wind tunnel modeling to provide greater assurance of the correct location of outside air intakes.

7-11.4 **Noise Control**. Noise Criteria (NC) for individual rooms and spaces in

the facility are provided at Appendix A of this document.

7-11.4.1 Room Breakout. The HVAC designer shall coordinate with the architectural designer to control equipment noise passing from mechanical rooms into adjacent spaces through the surrounding walls or partitions.
7-11.4.2 Crosstalk. The compromising of patient privacy by transmission of audible speech from one room to another via ductwork is of great concern in medical facilities, and shall be addressed by HVAC designers. Examination rooms, physician's offices, and toilets require the designer's particular attention. Ductwork connecting adjacent rooms must have the necessary attenuating characteristics to eliminate audible speech transmission. Typically this is addressed by the provision of well-separated "takeoffs" and/or several duct elbows in the intervening ductwork.

7-11.4.3. Air Fixtures. Air distribution supply, return, and exhaust fixtures (diffusers, grills, etc.,) shall be sized to provide air inlet/outlet velocities consistent with room NC level requirements as provided at Appendix A. Designers must be aware that diffuser manufacturer's published noise characteristics are based upon idealized inlet conditions: crinkled flex duct, abrupt branch duct connections, elbows located immediately at the diffuser collar, and similar poor connections may result in unacceptable noise levels. Spin-in or other 90 degree duct drop connections to diffusers shall be equipped with equalizing grids as necessary to assure uniform air distribution at the diffuser inlets.

7-11.4.4 Air Velocity. Designers shall limit air velocities in ductwork (see additional guidance below), air transfer grills, or door undercuts to values consistent with ASHRAE recommendations to control noise generation.

7-11.4.5 VAV/CAV Terminal Units. Variable Air Volume Terminal units and constant velocity controllers are a frequent source of noise generation in air distribution systems. Designers shall specify or schedule units with minimum inlet sizes for incremental ranges of flow, and shall indicate maximum sound power output for each unit, at the maximum inlet static pressure which the designer anticipates that the unit will be exposed to. If integral sound attenuating devices are required, these shall be indicated for the respective terminal unit(s) is specs or drawing schedules.

7-11.4.6 Exterior Noise Sources. Designers shall evaluate the sound characteristics of exterior equipment provided as part of the project design (such as cooling towers, emergency generators, etc.) to assure that such sources do not result in interior noise levels exceeding limitations provided in Appendix A.

7-11.5 **Duct Design**. Duct systems shall be designed in accordance with references 7a, 7b, 7e, and 7l. Maximum velocity in ductwork mains shall not exceed 760 M/m (2500 fps), and velocities in branch ducts and takeoffs shall not exceed recommended levels in these standards. Ductwork plans shall indicate the static pressure class required for sealing and reinforcement for all types of duct. Access panels shall be provided as necessary for access to fire dampers, smoke dampers, and control equipment, and to facilitate periodic cleaning or disinfecting of ductwork. All supply air, with the exception of air transferred between spaces for the purpose of

pressurization, shall be provided in sheet metal ductwork.

7-11.5.1 Non Corrosive Ductwork Material. Ductwork installed downstream of high efficiency final filters (90% or greater, see Appendix A) or trim humidifiers, serving critical spaces, shall be of stainless steel, or aluminum, including all accessories such as dampers, fasteners, and turning vanes. This provision does not apply for ductwork downstream of high efficiency filters when these are located at the air handling units (filters noted in the “intermediate” column in Appendix A). Exhaust ducts for glass washers, dishwashers, and cart washers shall be non-corrosive and shall have soldered or welded joints and shall be pitched to drain.
Ductwork for laboratory equipment is covered elsewhere in this section.

7-11.5.2 Return Air Plenums. Corridors shall not be used as return air plenums in any portions of facilities. Exceptions allowing transfer air for toilets and janitor's closets, as provided in NFPA 90A and 101, (references 7d and 7h) shall be permitted. Utilization of above-ceiling areas as return air plenums shall not be permitted in inpatient or critical-care areas of facilities. Utilization of above-ceiling areas for return or exhaust air in portions of facilities not classified as healthcare occupancy is discouraged but may be considered on an individual project basis when justified and approved by TMA/PPMD.

7-11.5.3 Duct lining. The utilization of duct lining materials is prohibited in all medical facilities. These materials may harbor dust and moisture, providing an ideal environment for the propagation of pathogenic or noxious microorganisms. Factory fabricated sound attenuators, packed type, which comply with ASTM C1071 and UL 181, shall be used to attenuate fan noise. No duct lining materials which are porous to the airstream may be utilized.

7-11.5.4 Balancing Provisions. Duct branches serving each individual space shall be provided with a manual balancing damper, accessible above the ceiling, located as remote from the space supply or return fixture (diffuser, register, etc.) as practicable. The balancing damper provided as part of air diffusers is not to be used for system balancing.

7-11.5.5 Telecommunication Rooms. Ducts shall not be routed through telecommunications rooms per ANSI/EIA/TIA-569-A (reference 7u).

7-12 **MAINTENANCE PROVISIONS**.

7-12.1 **General Personnel Access**. Safe and practical means of personnel access must be provided to, and within, all areas of the facility where equipment is located, to adequately provide for operation, maintenance, and replacement (O&M) of the equipment. Access to equipment rooms from outside the facility should be provided where feasible. Within equipment rooms, provide clearance to all service points to mechanical equipment to allow adequate personnel access and working space in accordance with equipment manufacturer’s recommendations; but as a minimum, maintain 0.75M (2.5 ft) at all service points and 1.7M (5.5 ft) of overhead clearance for O&M accessways. Proper clearance shall be provided such that personnel do not

have to climb over equipment or crawl on hands and knees. When rooftop air handling units are provided, coordinate with the architectural designer to provide pavers or other personnel access pathways which will not damage the roof.

7-12.2 **Equipment Clearances**. Minimum clearances between electrical and mechanical equipment shall be as required by NFPA 70, (reference 7m). Assure that practical means are provided for the removal/replacement of the largest and/or heaviest equipment item(s) located in the facility. Provide adequate pull space for all coils, heat exchangers, chillers, boiler tubes, and filters. Sufficient space shall be provided in above-ceiling areas to facilitate equipment installation and O&M. For building designs utilizing interstitial floor distribution zones, further guidance is provided at Appendix E..

7-12.3 **Suspended/Mounted Mechanical Equipment**. Where suspended and mounted equipment is installed, provide a minimum of 1700 mm (67 in) of clearance for headroom as required. In refrigeration equipment rooms, provide overhead clearances required by ASHRAE 15, (reference 7j). For any work station or location requiring maintenance access, which is not readily accessible from a 1800 mm (6 ft) high portable ladder, provide a fixed ladder and/or catwalk.

7-12.4 **Air Distribution System Components**. Outdoor air intake plenums, air handling unit casings, and distribution ductwork shall be designed to permit access for periodic cleaning or disinfection.

7-12.5 **HVAC System Balancing Provisions**. Adequate access shall be provided to facilitate operation, adjustment, and testing at all HVAC balancing and measuring points and equipment, including automatic and manual damper operators, air terminal units, pilot tube ports, valves, and sensing devices.

7-13 **VIBRATION CONTROL**. All prime moving equipment shall be isolated to prevent transmission of vibrations to the structure.

7-14 **INTERDISCIPLINARY COORDINATION**.

7-14.1 **Fire Protection Features**.

7-14.1.1 Smoke and Fire Dampers. HVAC service zones should be designed to coincide with smoke compartments whenever practicable. Ductwork penetrations of fire/smoke rated walls should be minimized, to minimize the required number of smoke/fire dampers and complexity of controls. Coordinate with the architectural design to assure that necessary access for inspection or service of these dampers is provided.

7-14.1.2 Ductwork. Air supply and exhaust systems shall be of the mechanical ventilation type and shall meet the requirements of NFPA 90A and 96, (references 7d and 7e). Grease-laden vapor exhaust ductwork shall be in accordance with NFPA 96.

7-14.1.3 Smoke Mode Operation. Comply with Section 12, Fire Protection, of this

document.

7-14.1.4 Commissioning of Fire/HVAC Systems. Guide specifications typically do not contain provisions for the simultaneous testing of HVAC and fire protection systems, which can have complex, interwoven operational requirements in some facilities. For each project where applicable, designers shall develop or modify specifications as needed to provide for testing of HVAC systems under fire alarm conditions, to permit verification not only of correct function, but of acceptable speed of response. In more complex systems involving smoke evacuation or compartmentalization/pressurization, detailed testing protocols and/or system diagrams must be developed to clearly convey the required scope of the commissioning effort.

7-14.2 **Emergency Electrical Service**.

7-14.2.1 Capacity. The HVAC system equipment serving Critical areas shall be connected to the essential electrical power system, to assure service continuation in the event of normal power disruption, in accordance with the requirements of NFPA 99 (reference 7c). Cooling, as well as heating, shall be maintained to Critical areas in the event of normal power outage.

7-14.2.2 Commissioning. Service guide specifications do not adequately address testing requirements for HVAC/Emergency Power System (EPS) interoperability. HVAC systems connected to the EPS must be shown to function as intended under conditions of normal power interruption. Testing of the EPS must be conducted in conjunction with any components of the HVAC system required for support; For example, thermostatically operated louvers may be required in emergency generator rooms for makeup air, generator radiator cooling may be a function of such HVAC components as pumps or cooling tower, etc. Testing must verify the actual connection of HVAC equipment to the EPS in accordance with the design following normal power outage, in the priority sequence established by the design. Designers shall supplement or modify guide specifications to assure that such verification testing is adequately detailed and described.

7-14.3 **Seismic Design Requirements**. Refer to Section 5 for seismic provisions for the HVAC system equipment and components. Designers shall be responsible to assure that seismic bracing of HVAC piping is coordinated by design with thermal expansion compensation features, to allow for the necessary pipe movement with temperature changes.

7-14.4 **Design Coordination**. Designers are responsible to coordinate the HVAC with the electrical, communications, architectural, and structural aspects of the design to assure that equipment can reasonably be installed by a contractor providing equipment, and following installation procedures, within the terms of his contract. For this reason, designers are instructed to base equipment room and distribution space designs upon spatial envelopes (including maintenance clearances) which will accommodate any of at least three manufacturers of major equipment. Routes of ductwork and piping must be carefully coordinated with other elements, considering

required slope, insulation, bracing, reinforcement, slope, and maintenance access. This practice in no way infringes on or substitutes for the construction contractor's responsibility, to be defined in project specifications, to coordinate the installation work of all trades and to provide detailed shopdrawings showing the proposed construction; Rather, it assures that the contractor will be able to achieve his goal without the necessity of additional design work.

7-14.4.1 Equipment Rooms. To assure adequate coordination, designers must consider not only the HVAC equipment, but the work requirements of other trades. Assure adequate clearance around air handling units to permit bolting the units together and securing them to their housekeeping pads, meanwhile providing space for the general contractor to install wall partitions. Consider the locations of plumbing and medical gas equipment. Assure it will be possible for maintenance workers to access all controls, electrical panels, valves, and instrumentation. Be aware of NEC clearance and vertical dedicated space requirements for electrical equipment. Coordinate ductwork, outside air plenums, etc. with the locations of lighting.

7-14.4.2 Above-ceiling Plenums and Chases. Designers must anticipate the worst case insulation, duct reinforcement, equipment support, slope, and fitting characteristics associated with ductwork and piping distribution systems, and be careful to coordinate the location of these systems with other equipment, including in particular cable trays and lighting fixtures with their vertical access/clearance space requirements. Assure that access space is considered for damper operators, low point steam drip assemblies, VAV terminal units, reheat coil controls and instrumentation, service valves, and access doors for ductwork for cleaning or damper inspection.

7-15 **FUEL STORAGE REQUIREMENTS**. Refer to Section 5 of this document, Seismic Design, for fuel storage requirements for facilities in seismic threat regions. Additional fuel storage guidance for boiler plants shall be obtained from the individual service criteria

7-16 **VENTILATION DESIGN**.

7-16.1 **Ventilation Air Changes**. Minimum air change rates for each space, for both outside air and total air, are provided at Appendix A. Ventilation rates contained in ASHRAE Standard 62.1 (reference 7q) shall be applied for spaces or applications not addressed by Appendix A. Based on the number of occupants identified for each space, calculate the outside air requirements of ASHRAE 62.1 and compare to the rates given in Appendix A, utilizing the more stringent figure in the design. The minimum outside air change rates in Critical Care Spaces shall be maintained at all times, except as addressed elsewhere in this Section for Operating and Delivery Rooms during periods of non-use. Reduced outside air ventilation in noncritical areas may be considered during nonoccupied times. In addition, a Corrected Outside Air Ratio, calculated in accordance with ASHRAE 62.1 section 6.2.5, may be applied for non-critical spaces. The outside air ratio for non-critical high-occupancy spaces, including classrooms, waiting rooms, auditoriums, and conference rooms, may be adjusted in accordance with the provisions of ASHRAE 62.1 section 6.2.6 when the maximum occupancy peaks for a duration of less than three hours.

7-16.2 **General Exhaust Provisions**. Exhaust systems shall be provided for Central Sterile Decontamination(Ethylene Oxide), animal holding areas, autopsy/morgue spaces, laboratory fume hoods, radioisotope hoods, bacteriological cabinet, kitchens, laundry, toilets, isolation rooms, equipment rooms, and other areas as noted in Appendix A or as designated on an individual project basis. No duct system conveying potentially hazardous exhaust (ETO, lab hoods, etc.) shall be connected with a general or toilet exhaust system. All exhaust discharge outlets shall be located above the building roof line and located to prevent short-circuiting to air intakes or other building openings. Exhaust fans shall be located at the end of the exhaust duct run (exhaust ducts to be under negative pressure).

7-16.3 **Space Pressurization**. The required pressurization of individual spaces, relative to adjacent spaces or corridors, is indicated at Appendix A. Where a negative or positive pressurization are required for a given space, that pressurization shall be maintained by the HVAC system under all conditions of operation, including periods of reduced ventilation or night setback.

7-16.4 **Laboratory Ventilation**. Exit corridors shall not be utilized to directly supply or exhaust air from the laboratory, although "transfer" of air to/from corridors may be utilized to establish required room pressurization. Negative pressurization of laboratories in relation to surrounding occupancies shall be maintained under all conditions of HVAC system and fume hood operation.

7-16.4.1 Exhaust Systems. Laboratory equipment utilized for personnel protection from hazardous chemical, microbiological, or radioactive airborne particles or gases shall be provided with independent exhaust systems in accordance with NFPA 99, (reference 7c). Exhausts from general chemical laboratory fume hoods located within a laboratory unit may be combined into central exhaust systems in accordance with guidance in references 7c and 7g. Exhausts from hoods handling perchloric acid or other strong oxidizing agents, materials or agents requiring HEPA filtration, or exhausts which, when combined, chemically interact or change the explosion/ignition limits, may not be combined. Additional guidance for hood and exhaust design is contained at references 7a, 7b, 7c, 7g, 7j, and 7q. Exhaust duct discharge height shall be above the building recirculation cavity boundary. In all cases exhaust discharge shall have sufficient stack height, velocity, and distance from building openings, outside air intakes, or recirculating air currents, to preclude reentry into the building. Air velocity in exhaust ductwork shall be sufficient to transport the contaminant vapors, fumes, dusts, or other particulate matter for which the fume hood(s) is designed.

7-16.4.2 Laboratory Fume Hoods, General. Fume hoods shall be located in areas of minimal air turbulence, away from doors, windows, and traffic, to minimize disruption of required sash airflow. HVAC system/fume hood controls shall be designed such that operation or shutdown of any fume hood in a given space will not disrupt the required room air balance or the required sash airflow at other hoods operating in the space. General purpose laboratory fume hoods that control personnel exposure to chemicals and physical contaminants shall have a minimum sash face velocity of 0.508 m/s (100 fpm). Fume hoods shall be provided with audible and visual alarms to indicate

inadequate sash airflow conditions.

7-16.4.3 Radioactive Material/Radioisotope Hoods. Duct systems serving hoods for radioactive material shall be constructed of acid resistant type stainless steel for their entire length. Ductwork shall be flanged with neoprene gasketed joints to facilitate dismantlement for decontamination. Fume hood exhaust shall remain in constant operation, and shall be filtered with carbon and/or HEPA filters as required to meet Nuclear Regulatory Commission (NRC) requirements. The location of filters in the system shall be chosen to best facilitate their safe removal, disposal, and replacement by maintenance personnel. All filters shall be automatically monitored to provide indication that changeout is required. All hoods shall comply with requirements of the Nuclear Regulatory Commission.

7-16.4.4 Canopy Hoods for Prosthetic Dental Laboratories. Canopy hoods for Prosthetic Dental Laboratories, and exhaust ductwork extending for a distance 3000 mm (10 ft) downstream from the hood connection, shall be fabricated of material which is corrosion resistant to the caustic fumes emanating from boil-out tanks and casting activities conducted in the laboratory.

7-16.4.5 Biological Safety Cabinets (BSCs). Class, Type, and location of BSCs shall be as directed by the using agency. Class II BSCs are provided with HEPA filtration of recirculated air and/or building exhaust, and are provided in such areas as Microbiology and Mycology. The required open door/sash face velocity for Class I and Class II Type A BSCs shall be 0.381 m/s (75 fpm), and for Class II Types B1, B2, and B3, shall be 0.508 m/s (100 fpm). For further information of biological safety hood Class, Type, application, and exhaust requirements, refer to references 7a, 7r, 7s, and 7t.

7-16.4.6 Perchloric Acid Hoods. Hoods for handling of perchloric acid and other strong oxidizing agents, and the associated exhaust ductwork, shall be constructed of stainless steel. Internal water spray systems shall be provided for hood and all ductwork to facilitate the periodic washdown. Joints shall be welded and ground smooth, and all ductwork pitched back toward the hood to facilitate drainage. More detailed guidance is provided by the ACGIH publication.

7-16.4.7 Containment Laboratories BL-3 and BL-4). These laboratories deal primarily with indigenous or exotic agents which may cause serious or potentially lethal disease as a result of exposure by inhalation. The HVAC design for these laboratories shall assure the continuous negative pressurization and exhaust of the space. The exhaust air from these spaces shall not be recirculated to any other area of the building, but shall be transported through dedicated exhaust ductwork to be directly discharged to the outside of the building. Design of BL-3 and BL-4 laboratory exhausts shall comply with latest editions of OSHA and other Federal regulations.

7-16.5 **Exhaust Canopies**. Exhaust canopies shall be provided for equipment or appliances generating high heat or moisture (steam) loads, such as glassware washers, boilout tanks, drying ovens, sterilizers, and stills, as required. In some cases, specially designed canopy hoods may be necessary to control personnel exposure to

hazardous chemical vapors. Canopy hood design shall comply with the ACGIH data for "Canopy Hood" (reference 7b).

7-16.6 **Laminar Flow Clean Benches**. These horizontal flow hoods shall be used in pharmacy for preparing intravenous fluids and similar laboratory processes. Clean benches recirculate room air and do not require exterior air supply or exhaust systems.

7-16.7 **Bench-Back Slot Hoods**. Slot hoods are typically built into the wall behind laboratory benches to exhaust vapors, gases, and odors that are released with little energy or velocity. Typical applications are laboratories, brace shops, and other spaces in which volatile chemicals are routinely used. Design of these hoods shall be in accordance with ACGIH guidelines, with a slot velocity of 10.2 m/s (2,000 ft/min).

7-16.8 **Portable Bench-Top Hoods**. Portable hoods with glass viewing panels and interior lighting may be used to control chemical contaminants of minor toxicity and odors. They shall be attached to built-in exhaust outlets with flexible ducts. Each built-in exhaust system outlet shall provide a minimum of 0.0755 m3/s (160 cfm) or a face velocity of 0.38 m/s (75 ft/min) at the hood, whichever provides the maximum mass flow of air. The exhaust duct opening shall be provided with a blast gate and sealing plug to stop air flow when the unit is not in service.

7-16.9 **Waste Anesthesia Gas Exhaust** (**WAGE**). In each space utilized routinely for the administration of inhalation anesthesia or analgesic agents, a Waste Anesthesia Gas Exhaust (WAGE) disposal system for removal of waste anesthetizing gases shall be provided, designed in accordance with NFPA 99. Coordinate required system vacuum pressure and terminal fittings with using Military Department Anesthesiology and Oral Surgery Departments on an individual project basis.

7-16.10 **Medical Equipment**. See Section 15 of this document for special ventilation requirements of medical equipment.

7-16.11 **Ethylene Oxide**. Sterilizers, aerators, manifold rooms, and disposal systems shall be directly exhausted to the outside by a dedicated exhaust system. ETO storage and supply systems and ventilation design shall be in accordance with 29 CFR 1910.1047, Section 15 of this manual, and the latest industry guidance. Ventilation provisions currently include such features as exhaust inlets above and below sterilizer door, waste water discharge, and floor drain. Ventilation of bottle storage rooms is also required. An audible and visual alarm shall be provided to warn of loss of airflow in the exhaust system. Increasingly, local and state regulations prohibit or limit the discharge of ETO to the environment. These shall be considered applicable to DOD medical facilities, and in such cases the design shall utilize ETO "scrubbers" or other approved technologies to prevent or reduce ETO emissions as required.

7-16.12 **Kitchen Hoods**. Exhaust hoods in the kitchen area are to be the type utilizing 80 percent unconditioned air and having an exhaust rate of not less than 0.0022 m^3/s per square meter (50 cfm per square foot) of face area. Face area is

defined for this purpose as the open area from the exposed perimeter of the hood to the average perimeter of the cooking surface. If economically justified, hood makeup air should consist of up to 80% outside air tempered, through heat recovery equipment, by the exhaust. Equip all hoods over the cooking service equipment with fire extinguishment systems, automatic washdown and grease extractors, and heat-actuated fan controls. Cleanout openings, and required fire protective enclosures and separations, shall be provided in horizontal exhaust duct systems serving these hoods grease hood exhaust ducts in accordance with NFPA 96.

7-16.13 Pharmaceutical Admixture Rooms shall be in compliance with U.S. Pharmacopoeia (USP) 797 (reference 7x).

7-17 **PATIENT ISOLATION ROOM DESIGN**. Isolation rooms consist of Disease Isolation and Protective Isolation rooms. The former is intended for the patient suffering from a known or suspected infectious disease, and is provided with engineering controls which assist in preventing the spread of the disease from the room. Protective Isolation rooms are provided for the patient having an immune system deficiency, and require engineering controls to assist in the protecting the patient from contamination from outside the bedroom. Rooms shall be one or the other, and not “switchable” from disease isolation to protective isolation function, or vice versa. Isolation Bedrooms shall be provided with pressure-monitoring alarms and gauges mounted on the outside corridor wall; when a central DDC control operators station is provided, the alarm should in addition be connected to that system.

7-17.1. **Disease Isolation Bedrooms**. Disease Isolation bedrooms shall be designed to incorporate requirements and guidance contained in the Guidelines for Preventing the Transmission of Mycobacterium Tuberculosis in Health-Care Facilities (the TB Guidelines), published in the Federal Register Vol. 59, No. 208, 28 Oct 94 (or latest edition thereof). These rooms shall be negatively pressurized and exhausted to the outside, and provided with the minimum total and outside air change rates (12/2, respectively) referenced at Appendix A. Exhaust ductwork from the bedrooms, the associated toilet, and the anteroom (if provided) shall be “dedicated” in the sense that the system may serve only the bedroom suite or other disease isolation bedrooms. This exhaust system shall be connected to the building emergency power system. Bedroom suites shall be supplied by air systems provided with constant-volume control and measuring terminal units which automatically maintain the supply air flowrate setpoint to each space. Exhaust systems shall be constant volume systems maintaining a fixed exhaust flow rate for each space. When bedroom exhaust is located such as to prevent reentrainment into outside air intakes or other building openings, HEPA filtration of the exhaust is not required.

7-17.1.1 Existing Facilities. In existing facilities, only those bedrooms designated by the facility specifically for use as Tuberculosis Isolation Bedrooms are required to be designed in accordance with the TB Guidelines referenced above. TB Isolation Bedrooms shall be negatively pressurized and exhausted, and shall be provided with 12 air changes per hour if economically or physically practicable. When not practicable to achieve this air change rate, TB Isolation Bedrooms shall have a minimum of 6 air changes per hour, to be supplemented by HEPA filter or Ultra Violet Germicidal

Irradiation (UVGI) systems specifically designed for TB Room applications and providing the equivalent of an additional 6 air changes per hour. Fixed-in-place HEPA filtration units are preferable to portable units, and upper-level UVGI systems are preferred over duct-mounted units, to enhance reliability. Room exhaust shall be conducted to the outside of the building; when designed to avoid reentrainment into outside air intakes or other building openings, HEPA filtration of the exhaust is not required.

7-17.1.2 Isolation Suite Relative Pressurization. When an anteroom is provided for the isolation bedroom, interposing between the bedroom and corridor to provide a “buffer” airspace for additional protection, there are several recognized design approaches for corridor-anteroom-bedroom relative pressurization. A recommended design is to provide for the anteroom to be under negative pressure relative to the corridor, and positively pressurized relative to the bedroom.

7-17.2 **Protective Isolation Bedrooms**. The air supply to the protective isolation bedroom suite shall be constant flow and shall be provided with HEPA filtration. 12/2 total and outside air changes, respectively, are required for these bedrooms. As with disease isolation bedrooms, there are several recognized approaches to the relative corridor-anteroom-bedroom pressurization; a recommended approach is to establish the anteroom positively pressurized relative to the corridor, and negatively pressurized relative to the bedroom.

7-17.2.1 Existing Facilities. When upgrading existing protective isolation bedrooms to this criteria, 12/2 air changes per hour shall be provided if economically and physically practicable. When impractical, these bedrooms shall be provided with a minimum of 6 total air changes per hour and supplemented by HEPA filtration or UVGI systems to provide the equivalent of 12 air changes.

7-17.3 **Disease Isolation Exam or Waiting Rooms**. Disease isolation exam or waiting rooms shall be provided with a minimum of 12 total air changes, as provided in Appendix A, with the room air exhausted to the outside.

REFERENCES

7a. American Society of Heating, Refrigerating and Air-Conditioning Engineers, Inc. (ASHRAE) Handbook Series.

7b. ACGIH, "Manual of Recommended Practices for Industrial Ventilation."

7c. NFPA 99, "Standard for Health Care Facilities."

7d. NFPA 90A, "Standard for the Installation of Air Conditioning and Ventilation System."

7e. NFPA 96, "Cooking Equipment, Vapor Removal."

7f. NFPA 801, "Facilities for Handling Radioactive Materials."

7g. NFPA 45, "Labs Using Chemicals".

7h. NFPA 101, "The Life Safety Code".

7i. UFC 3-400-02, “Design: Engineering Weather Data”

7j. ASHRAE 15, "Safety Code for Mechanical Refrigeration".

7k. ASHRAE 34, "Number Designation and Safety Classification of Refrigerants".

7l. SMACNA, "HVAC Duct System Design".

7m. NFPA 70, "National Electrical Code".

7n. UL 181, "Standard For Safety, Factory-Made Air Ducts". 8o.

7o. ASTM C 665, "Mineral-Fiber Blanket Thermal Insulation". 8s.

7p. UFC 3-400-01, “Design, Energy Conservation”

7q. ASHRAE 62.1. “Ventilation for Acceptable Indoor Air Quality” American Society of Heating, Refrigerating and Air-Conditioning Engineers, Inc.

7r. OSHA - Part 1910, "Occupational Safety and Health Standards."

7s. CDC-NIH, "Biosafety in Microbiological and Biomedical .Laboratories."

7t Standard 49, "Class II (Laminar Flow) Biohazard Cabinetry", National Sanitation Foundation.

7u. ANSI/EIA/TIA-569-A Standard Commercial Building Standard for Telecommunications Pathways and Spaces

7v. UFC 4-010-01, “DoD Minimum Antiterrorism Standards for Buildings”

7w. UFC 3-600-01, “Fire Protection Engineering for Facilities”

7x. U.S. Pharmacopoeia (USP) Pharmacists’ Pharmacopoeia General Chapter 797, Pharmaceutical Compounding — Sterile Preparations.

SECTION 8

PLUMBING AND MEDICAL GASES

8-1 **GENERAL**. This section provides design guidance for plumbing and medical gas systems for Department of Defense (DOD) medical, dental, training, and research facilities. The primary purpose of these systems is to provide safe and reliable support to the medical functional mission. In addition, appropriate design consideration shall be given to ensure system maintainability, economy and energy efficiency, and adaptability to future facility modification or expansion. For plumbing-related issues associated with fire protection systems, see the Fire Protection Section of this document.

8-1.1 **Supplemental Criteria and Standards**. These criteria may be supplemented by individual Military Departmental criteria, including installation-specific requirements, as established by the Design Agent. Minimum design requirements shall be as provided by the International Plumbing Code (IPC) (reference 8b) in accordance with UFC 3-420-01 (reference 8a), the National Fire Protection Association Standards, and the other documents listed as references.

8-1.2 **Plumbing Systems**. Plumbing systems include domestic cold and hot water; sanitary, storm, and industrial (acid) waste drainage; water treatment (such as softening, deionization, reverse osmosis); fuel gas; and landscape irrigation. Plumbing systems shall be designed to be safe reliable and maintainable. Selection of materials, equipment, and installation techniques shall consider life cycle cost effectiveness and maintainability in addition to medical functional requirements. Potable water distribution pipe 50 mm (2”) and smaller shall be copper. Designers are specifically alerted to provide for appropriate system isolation and balancability, and necessary equipment and design practices to avoid cross connections and backflow.

8-1.3 **Seismic Requirements**. Seismic design criteria are provided in the Seismic Design Section 5 of this document.

8-1.4 **Corrosion Protection**. All piping which will be installed in an environment that supports galvanic reaction shall be protected from corrosion in accordance with Military Department criteria and the standards and recommended practices of the National Association of Corrosion Engineers (reference 8c).

8-1.5 **Waterborne Pathogen Prevention/Control**. The Center for Disease Control (CDC) (reference 8d), the American Society of Heating, Refrigeration, and Air-Conditioning Engineers (ASHRAE) (reference 8e),the American Society for Healthcare Engineering (ASHE) and the Joint Commission on Accreditation of Healthcare Organizations (JCAHO)(reference 8f) have cited two main means by which waterborne pathogens are introduced into MTF’s - by the water supply system and cooling towers. Water-borne bacteria, chiefly Legionella, have been documented as the infectious pathogens in a significant percentage of nosocomial infections. The diseases associated with legionella infection are legionellosis, frequently resulting in pneumonia,

and Pontiac Fever, a less severe illness. The guidance provided in this Section addresses control of Legionella in plumbing systems, and is based in principle on the recommendations found in these references. Typical water supply systems, including base or public central distribution and local wells, must be presumed to be contaminated with the Legionella bacteria. Standard water utility treatment and testing practices are not considered adequate to ensure protection against the bacteria entering a facility. It is therefore necessary that Legionella bacteria prevention and control guidelines be considered in MTF designs.

8-1.5.1 Legionella Characteristics and Transmission. The legionella bacterium is found throughout earth and water (aquifers, wells, reservoirs) environments, and must be expected in all water supplies. The greatest danger to humans occurs when the organism is permitted to multiply or “amplify” in a water supply system to the point that significant numbers of bacteria are present. Factors that lead to amplification include the following:

- Growth support deposits or coatings in system piping or equipment (e.g. scale, sediment, biofilm).
- A water temperature range of 25-42 degrees C (77-108degrees F) of both supply domestic cold and hot water systems, including temperature at fixture discharge, hot water generator, hot water return distribution systems, and in storage or holding tanks,
- Stagnation in tanks, and supply and return distribution systems, for both cold and hot water.

Legionella bacteria become aerosolized in moisture droplets of less than 5 micrometer diameter (optimum transmission droplet size for sustained suspension in air), created by shower heads, faucet aerators, spray nozzles, respiratory equipment, water impacting on hard surfaces, and bubbles breaking (such as occurs in hydrotherapy bath whirlpools). Practical means for altering the aerosols that can lead to legionella infections are limited.

8-1.5.2 General Design Considerations. Legionella protection guidance is provided in applicable locations throughout this Section; however designers should also carefully consider provisions in the latest editions of the guidelines referenced at 8-1.5 above. Healthcare facility operational procedures for legionella control, such as cleaning or decontaminating of respiratory equipment and environmental sampling, are addressed in the referenced guidelines. The referenced guidelines also address disinfection techniques for reducing Legionella colonization in existing facilities, such as superheated water flushing and hyperchlorination shocking. Generally speaking, the goal of the legionella-protection design is not to eradicate the bacteria, but to prevent or limit colonization.

8-2 **POTABLE WATER SUPPLY SYSTEM**.

8-2.1 **Quality**. All potable water supplies shall have an established potability monitoring program to be acceptable for use by an MTF. When an MTF project includes a non-potable water service (i.e., “gray water”) for systems such as irrigation, heating, or

cooling, the design shall provide for requirements for signage, pipe labeling, and other means as needed to clearly identify the system (including outlets) as unsafe for human consumption.

8-2.2 **Continuity of Service**. To the extent economically practicable, provide a minimum of two water services for hospitals, with each service fed from separate mains and sources, and designed for full demand (serving potable, process, and fire protection systems). These services should enter the building at separate locations. The purpose of this provision is to provide an uninterrupted supply of potable water, or permit swift service restoration, in the event of a water main break. If two separate water sources are not practically available, on-site storage shall be considered. Where practical, loop the mains around the facility and provide sectionalizing valves.

8-2.3 **Backflow Prevention**, **General**. The flow of non-potable water, or any other nonpotable liquids, into the potable water supply shall be prevented. Necessary measures to prevent backflow, cross connection, or back-siphonage shall be included in the design. Cross connection of a municipal and installation-dedicated (well-based, base pumping station, etc.) system shall require approval from the local Administrative Authorities. Generally, backflow isolation will be required on the main supply mains serving an MTF; Designers shall coordinate backflow prevention requirements, including requirements for maintenance accessibility and periodic testing, with the local municipality or Base Engineer, as appropriate.

8-2.3.1 Devices and Methods. All potable water discharge points, such as a faucet discharging into a reservoir sink or tub, shall be provided with an adequate air gap, in accordance with referenced criteria. Fixtures or equipment where the discharge point is positioned below the reservoir rim shall be fitted with a vacuum breaker. Examples of concern include the following:

- Bedpan washers, or similar fixtures including a flushometer valve.
- Flexible-hoses or shower heads, of length sufficient to reach below fixture rim, typically found in procedure rooms, hydrotherapy bath equipment, laboratories, and food service areas (e.g. washers, steam tables).
- Laboratory or other serrated-nozzle fixtures designed to accept flexible tubing.
- Water delivery outlets serving therapeutic, surgical, or autopsy/mortuary procedures.
- Hose bibs.

For the protection of makeup supplies to low hazard equipment (such as autoclaves and fire protection sprinkler systems), double-check backflow preventers may suffice. For the protection of sources supplying high hazard equipment and processes, reduced-pressure backflow preventers are required. Designers shall include provisions for drainage of the discharge from these devices; refer to Tables 8-1 and 8-2.

Table 8-1. Potential Backflow Preventer Discharge Rates

Assembly Pipe Size mm (inch)	Discharge L/s (GPM) at 420 kPa (60 PSI)	Discharge L/s (G/PM) at 1050 kPa (150 PSI)
19- 32 (3/4 -1 1/4)	4.7 (75)	8.8 (140)
38- 50 (1 ½-2)	10.7 (170)	17.6 (280)
63- 75 (2 ½-3)	15.8 (250)	25.2 (400)
100-150 (4-6)	31.6 (500)	53.6 (850)
200-250 (8-10)	33.1 (525)	56.2 (890)

Table 8-2. Floor Drain Flow Rates

Drain Size mm (inch)	Flow Rate* L/s (GPM)
100 (4)	5.6 (88)
150 (6)	16.8 (264)
200 (8)	36.3 (575)
250 (10)	66.3 (1050)
300 (12)	107.3 (1700)

* Flow rates for a floor drain with slotted cover and 3 mm (1/8 inch) drain pipe slope.

8-2.4 **Water Treatment**. A water chemistry analysis reporting, as a minimum, the calcium and magnesium concentrations and the water hardness shall be used as the basis for determining the potable water treatment design scope. Water treatment equipment packages requiring regeneration of media or components shall include multiple units as required to permit routine maintenance. Water treatment technologies for the control of waterborne pathogens are discussed at 8-2.5 below.

8-2.4.1 Scale Control. Water softening will generally be required when the water supply to the facility has a hardness of 170 mg/L (10gr/gal) or more. The softening system should be designed to deliver water with a hardness between 50 mg/L (3 gr/gal) and 85 mg/L (5 gr/gal); designer shall determine if any specialized equipment used in the MTF may require more stringent requirements. Dental facilities' water hardness shall not exceed 85 mg/L.

8-2.4.2 High Purity Water Systems. Water purification is the process by which contaminants or impurities, which affect undesirably the performance of specific equipment, or the outcome of medical and laboratory tests, are removed from the water. Water purification systems include reverse osmosis, deionization, ultra filtration, and UV sterilization. Type I and Type III reagent grade water, as specified in ASTM D 1193 (reference 8g), are used in various applications such as for medicine preparation processes in pharmacies, in distillation units, for designated laboratory outlets, and in selected equipment for Renal Dialysis, Glassware Washing, Central Sterile Supply, and other medical and laboratory functions. Their use shall be coordinated with the Using Agency and the Government Design Agent. The designer shall consider local and central treatment options, and treatment system combinations, best meeting the User's

needs and overall life cycle cost. Refer to the Heating, Ventilating, and Air Conditioning Section for make-up water treatment design guidance for steam systems.

8-2.5 **Legionella Control**. The relative danger that legionellae pose in any given MTF is a function of “system” factors which promote or discourage colonization (as discussed below and in references 8d, 8e,8f), of the relative vulnerability of the patient population, and even of such factors as climate and ground water temperature. The presence of aerosol generating sources such as showers and whirlpool baths increase the risk of legionella infection. More seriously ill patients, particularly those who are immunocompromised by medical condition or treatment, are more vulnerable to legionella infection than the general population. In addition to potential contamination danger from hot water systems, cold water systems pose the risk of supporting legionella colonization if the piping systems are subjected to heat sources. The temperature of cold water systems may be elevated into ranges more conducive to legionella colonization by ground temperatures, piping located in attics, ceiling spaces, equipment rooms, crawlspaces, or other unconditioned spaces, or by being located adjacent to hot water or steam piping. All of these risk factors should be taken into consideration when designing the domestic water system to help determine what special measures, if any, are called for to help control legionella.

8-2.5.1 Scale, Sediment, and Biofilm. Scale, sediment, and biofilm are contaminants that support Legionella bacteria colonization. The extent to which these support colonization is a function of factors including potable water service quality (including the presence of living aquatic amoebae such as are found in biofilms), system operating temperatures, and pipe material. Standard control technologies for scale and sediment deposits normally minimize the contribution of these factors to legionella colonization. Biofilms are resistant to some treatments. For addition and alteration projects, designers must be aware of the potential presence of established biofilms, sediments, and scale. Exercise caution in reusing existing piping system components without an analysis of the existing conditions. It may be contributing to Legionella colonization and subsequently, may lead to contamination of new service.

8-2.5.2 Reducing Legionella Potential in Existing Facilities. High velocity water flushing may be to some degree effective to purge excessive scale and sediment from existing piping or equipment. Additional measures for reducing legionella colonization potential include cleaning or replacement of hot-water storage tanks, hot water generators, faucets, and showerheads. Piping disinfection may be accomplished via hyper chlorination at levels of up to 10 mg/L of free residual chlorine, or by thermal shock (hot water flushing) using water heated to a temperature of 65 degrees C (150 degrees F) or more for a duration of at least 5 minutes.

8-2.5.3 Design Considerations. Treatment systems for legionella control shall be sized on the total potable water demand – both cold and hot. Treatment shall be applied to the water service main. Designs should incorporate the following practices to minimize the potential for legionella colonization:

a. Treatment systems shall be provided for hospitals, and shall be either copper-silver ionization or chlorine dioxide.

b. Whenever practicable, specify pipe, equipment, and fixture components having direct water contact to be of materials which inhibit bacteria colonization, such as copper. For inpatient MTF's, avoid materials that support colonization, such as natural rubbers and some plastics, whenever practical.

c. Design distribution mains to maintain balanced flow throughout. Piping runs should be as short as practicable. Avoid creating piping "zones" which experience infrequent use, and therefore stagnation. As practicable, route mains close to fixtures to minimize the lengths of branch piping runs. Avoid creating stagnant piping sections, e.g. dead legs. Do not locate cold water piping near hot water piping or other heat sources.

d. Locate pressure balancing and thermostatic mixing anti-scald valves as close as practicable to the fixture discharge. The maximum pipe run should be 2 meters (6 feet).

e. Piping between fixture shutoff and discharge should be self-draining where possible.

f. Use care to properly select the operating head of the recirculation pump(s), taking into consideration system head requirements, including the pressure drop of thermostatic mixing valves.

g. Consider instantaneous hot water generators where feasible, and when on-site storage is not required by other criteria, to avoid stagnant storage conditions.

h. Water storage of holding tanks, both cold and hot, shall be designed to have continuous flow with maximum practical velocity. They shall not be piped as branched components with discharge line shutoff valves closed. Storage tank capacity shall be adequate for the application, but not oversized. The capacity sizing shall factor in the current healthcare procedures such as increased outpatient medical functions reducing the load profiles and hot water recovery demand.

8-2.6 **Domestic Hot Water Systems**.

8-2.6.1 Hot Water Demand. The demand load can be calculated using several different methods, examples of which are contained in ASHRAE and American Society of Plumbing Engineers (ASPE) handbooks (references 8h or 8i). The preferred method for calculating hot water demand for an MTF is the per-fixture method. This method provides a means to account for various uses within each facility, and permits the tabulation of the hot water load using a specified demand for each fixture. Summing individual fixture demands, the total demand is utilized to size the heater recovery rate and storage size. Table 8-3 provides a list of representative fixtures taken from MIL-STD-1691 (reference 8j) and their demands based on data provided in ASHRAE and ASPE handbooks (references 8h and 8i). For any fixture not shown, the designer shall determine the demand rate based upon experience, standard practice, and available Using Agency input. An example of system sizing is given below:

Example 1: Determine the heater and storage tank size for a medical clinic with the following fixture schedule:

12	Clinic Sinks	X	15.0 L/h	(4 gph)	=	180.0 L/h(48 gph)
1	Plaster Sink	X	38.0 L/h	(10 gph)	=	38.0 L/h (10 gph)
8	Public Lavatories	X	23.0 L/h	(6 gph)	=	184.0 L/h(48 gph)
12	Clinic Lavatories	X	30.0 L/h	(8 gph)	=	360.0 L/h(96 gph)
2	Mop Service Basins	X	76.0 L/h	(20 gph)	=	152.0 L/h(40 gph)
1	Arm Whirlpool Bath	X	130.0 L/h	(35 gph)	=	130.0 L/h(35 gph)
1	Leg Whirlpool Bath	X	380.0 L/h	(100 gph)	=	380.0 L/h(100 gph)
1	Foot Whirlpool Bath	X	57.0 L/h	(15 gph)	=	57.0 L/h (15 gph)
1	X-ray Film Processor	X	57.0 L/h	(15 gph)	=	57.0 L/h (15 gph)

Possible Maximum Demand 1538.0 L/h (407 gph)

Using the Demand Factor of 0.40 yields

Probable Maximum Demand = Possible Maximum Demand X Demand Factor
Recovery Rate = 1543.6 L/h X 0.40 (407 gph X 0.40)
Heater or Coil Capacity = 617.4 L/h (162.8 gph)

The Storage Capacity Factor of 1.00 is then applied to this recovery rate or heater capacity to determine the

Storage Tank Capacity = Heater Capacity X Storage Capacity Factor
= 617.4 X 1.00 (162.8 X 1.00)
= 617.4 L (162.8 gal)

Explanation of Example 1:

A Demand Factor is applied to the Possible Maximum Demand to calculate the Probable Maximum Demand. The Probable Maximum Demand is the rate at which the heater shall generate hot water, or the recovery rate.

-The Probable Maximum Demand is factored by the Storage Capacity Factor to determine the Storage Tank Capacity. The Storage Tank Capacity is the capacity required being available for use. Storage tanks are not considered to be 100% usable and thus, a usable storage tank factor shall be applied to the calculated storage tank capacity; the percent capacity considered usable for most tanks is 70, thereby resulting is a 1.43usable storage tank factor. The usable storage tank factor for systems utilizing instantaneous generators or multiple tank arrangements shall be coordinated with the Design Agent.

Additional Note: The fixture-unit method is adequate for typical usage. Expanded usage for food service, non-standard fixtures, or abnormal usage patterns (extreme low or high demand peaks or erratic peak duration and occurrence) shall be factored into the sizing calculations. For example, food-service fixture demand factors need to be adjusted if disposable service ware is used. Concentrated patient treatment for sick call,

or other instance of high-peak usage, is another example of fixture hot water demand adjustment.

The Demand Factor and Storage Capacity Factor are listed in References 8h and 8i for given building types, which include a hospital but not medical clinic, dental clinic, nor laboratory. A Demand Factor of 0.40 and Storage Capacity Factor of 1.00 are considered representative for a clinic upon review of the factors for the building types shown. Factors for MTF's with laboratory space greater than 10% of the total facility space shall be coordinated with the Design Agent.

Table 8-3. Hot Water Demand per Fixture for MTF's

FIXTURE	L/H	(GPH)	HW SFU
Sink, Clinic	15	(4)	3
Sink, Plaster	38	(10)	3
Sink, Service (General)	76	(20)	3
Lavatory, Public (General)	23	(6)	1½
Lavatory, Patient (Private)	8	(2)	1
Lavatory, Clinic	30	(8)	3
Basin, Mop Service	76	(20)	3
Shower, Staff or Patient Group	284	(75)	3
Shower, Patient (Private)	114	(30)	2
Shower, Hydrotherapeutic	1520	(400)	11
Bathtub	76	(20)	3
Bath, Whirlpool, Arm	130	(35)	3
Bath, Whirlpool, Arm/Foot/Knee	57	(15)	3
Bath, Whirlpool, Leg	380	(100)	7
Bath, Body Hydrotherapy (Hubbard)	2270	(600)	17
Bath, Sitz 114 (30) 3			
Processor, X-ray	57	(15)	3

8-2.6.2 Hot Water Design Temperature. Domestic hot water shall be generated and stored at 60 degrees C (140 degrees F) minimum. It shall be tempered with a thermostatic mixing valve at the hot water generator discharge to permit distribution at a temperature range between 43 and 52degrees C (110-126 degrees F). The maximum hot water temperature distribution design set point shall be 43 degrees C (110 degrees F).However, provide the capability to increase system temperature to 52degrees C (126 degrees F) to permit an MTF the option to increase the temperature if so recommended by the Infection Control Officer. It is extremely important to note that at this temperature the exposure time for a first-degree burn is approximately 45 seconds. This is considered an adequate period for a fully aware adult to remove the exposed body area from the stream of a sink or lavatory, thereby maintaining a relatively safe condition at these fixtures without the requirement furan anti-scald valve. Infants, persons desensitized by medical condition or treatment, or those with severely limited motor capabilities, may be endangered by water at this temperature. Anti-scald valves shall be provided as close as possible to the taps of "whole-body" fixtures such as showers, bathtubs, and hydrotherapy baths. Hot water recirculation systems shall be designed to limit system temperature drop to 3 degrees C (5.5 degrees F) or less. Maximum hot water temperatures for other applications shall not exceed the following:

a. Supply and Utility Areas. Central sterile supply, soiled utility rooms equipped with bedpan washers, cart wash areas, and special pathological wash areas shall be provided with 60 degrees C (140 degrees F) hot water.

b. Kitchen Areas. The temperature normally required in dietary areas is the same as that distributed to standard hand washing and bathing plumbing fixtures. Dishwashing (automatic equipment) and pot washing normally require 82 degrees C (180 degrees F). Booster heaters shall be provided to obtain this temperature.

c. All Other. All other domestic hot water applications shall be provided with a hot water temperature the same as is distributed to standard hand washing and bathing fixtures.

8-2.6.3 Hot Water System Temperature Maintenance. In most facilities, a means of controlling system heat loss (and therefore temperature decrease) will be required to maintain delivery temperatures within acceptable tolerances. Hot water recirculation is required for all patient care facilities (both inpatient and outpatient), and shall be located as close to the fixture connections as practicable. Designs shall include provisions for isolating and balancing the system. Heat tape systems may be utilized in non-patient care facilities if cost justified, but are considered less desirable due to reported system malfunctions and difficulty in locating the malfunction point.

8-2.7 **Plumbing Fixtures and Other Equipment**. Plumbing fixtures should conform generally to American Society of Mechanical Engineers International, ASME standards series A112 (reference 8k) or International Association of Plumbing and Mechanical Officials, IAMPO standards seriesZ124 (reference 8l). For uniformity, all fixtures shall be identified by the Joint Schedule Number (JSN) provided in MIL-STD-1691 (reference 8j).Quantities of fixtures shall be in accordance with the Tri-Service Management Activity (TMA) Program For Design (PFD).

8-2.7.1 Handicapped Fixtures. Provide handicapped fixtures in accordance with the requirements of the Accessibility Provisions for the Disabled Section of this document and the TMA PFD.

8-2.7.2 Drinking Water Coolers. Locate public drinking water coolers convenient to each public waiting room and elsewhere as directed by the using Military Department. The standard rating and performance shall conform to ARI Standard 1010 (reference 8m). Refer to the Accessibility Section of this document for handicapped requirements.

8-2.7.3 Emergency Shower/Eye Wash Fixtures. Design in accordance with the American National Standards Institute (ANSI) Standard Z358.1 (reference 8n).

8-2.7.4 Water Usage Conservation. As of July 1992, the National Energy Policy Act (EPACT) has specified maximum consumption requirements for water closets, urinals, faucets and shower heads (for example, the water closet standard was lowered from 13.2 liters (3.5 gallons) per flush to 6.1 liters (1.6 gallons). Low-flow fixtures shall be specified for all projects.

8-3 **SANITARY DRAINAGE SYSTEM**. The MTF sanitary waste system shall be connected to an approved existing sewer system, either government or private as appropriate. If an existing sewage disposal system is not available, an approved alternative system shall be provided. For example, a holding tank may be acceptable for remote locations, for temporary service while awaiting the installation or retrofit of an approved sewage disposal system, or a backup such as for hardened or essential facilities. Any alternative to an approved central sanitary system shall be coordinated with the Installation's local approving authority. When connected to a local public system, code requirements in excess of the IPC (reference 8b) imposed by the local regulatory agencies shall be considered in the design. The system shall be designed to avoid excessive back pressure and aspiration effects. Adequate cleanouts shall be provided to permit access to all sections of the waste drainage system. The cleanouts shall be located to avoid or minimize disruption of medical functions. If a facility sanitary waste requires lifting or pumping, provide duplex pumping equipment and a backflow preventing check valve. This equipment shall be connected to the alternative power source if one exists, or is included in the project scope.

8-3.1 **Protection of Special Fixtures and Equipment**. Fixtures and equipment used for sterilization, and food preparation, processing, or storage, shall be protected from contamination by backflow of waste. An indirect waste line, such as an air break or physical disconnection (open drain) at the associated waste outlet, shall be incorporated into the system design. These provisions also apply to equipment that cannot be easily cleaned. Included are sterilizers, glass washers, refrigerators, kitchen equipment, film X-ray processors, dental lab equipment (e.g. boilout assembly tanks), and vacuum system separator tanks.

8-3.2 **Special Drainage Equipment**. Interceptors shall be provided when precious materials or heavy metals, such as silver and barium, are sediment in the waste drainage from such spaces as a Cast Room, a Prosthodontics Laboratory, barium procedure areas, film X-ray processing, and spaces employing blood analyzers. Interceptors for barium waste shall be aluminum. Flush rim floor drains shall be provided in Autopsy. Garbage grinding disposers shall be provided in Kitchens on dishwashers, pot and pan sinks, and other sinks as designated. Grease traps shall be provided with grease-producing kitchen equipment including prewash sinks, pot washers or sinks, and floor drains serving kettles. Separators shall be provided in uses where petroleum products are subject to dripping or spills, such as ambulance garages and mechanical equipment rooms.

8-3.3 **Special Purpose Waste Lines**. Separate waste lines shall be provided for acid waste and radioactive waste from laboratories, darkrooms and nuclear medicine treatment rooms, when justified by the quantities and/or concentration of reagent expected to be introduced. Acid-resistant waste piping will be utilized for such applications and, if required, will pass through a neutralizing or dilution tank before combining with building waste. If large quantities of acid or strong base solutions are to be discharged into the waste system, neutralization will be required. There are various radioactive materials to be found in an MTF. The particular radioactive waste for a given

facility shall be identified. The appropriate prescribed manner of disposal in accordance with federal and local safety standards shall be incorporated into the design.

8-3.4 **General-purpose Floor Drains**. General floor drains shall be considered for rooms in which water-using plumbing fixtures or equipment are located. These include physical therapy rooms which are equipped with hydrotherapy equipment, central sterile areas for sterilizers and sanitizing washers, food service areas, wash-down and housekeeping spaces, and mechanical equipment rooms which contain water-using equipment. Provision of floor drains in toilets shall be at the discretion of the using Military Department. Floor drains are normally not required at emergency shower locations.

8-3.5 **Trap Priming**. Where a trap seal is subject to loss by evaporation, a trap seal primer valve shall be installed per IPC (reference 8b). When utilized, automatic primers shall incorporate a backflow prevention feature. Other means of trap prime maintenance, such as using alternative sealing fluids (e.g. glycerin), are not permitted.

8-3.6 **Retrofit/Alteration Considerations**. The replacement of older existing fixtures with lower-flow fixtures will alter system performance. Smaller diameter pipe or increased slope may be necessary alterations.

8-3.7 **Elevator Pit Sumps**. Elevator pits shall be provided with a sump, which shall be either pumped or drained by gravity. Pumped designs shall deliver fluids to an indirect connection to the sanitary or storm drainage systems, such as a floor drain. The sump discharge line shall include a check valve to prevent back flow of fluid into the sump. If permitted by the local jurisdiction, a direct connection to the storm drainage system may be considered. Designers should also determine from the base engineering office or local jurisdiction if an oil interceptor is required. No other drains or sump discharges shall be connected to the elevator pit drain or sump. This equipment shall be connected to the alternative power source if one exists or is included in the project scope.

8-3.8 **Mercury Control**. Facilities containing operations which generate mercury wastes in the free or leachable (e.g. dental filling amalgams – refer to 8-6.18.1) state which are intended to be disposed to the sanitary waste system, shall consider separation provisions in accordance with federal, state or local requirements. The separation provision shall be incorporated as close to the source point as feasible. For mercury generating operations which do not require a separation provision initially, provide a 0.2 square meter (2 square foot) floor space with 0.67 meter (2 foot) clearance all around to accommodate a retrofit installation.

8-4 **STORM WATER DISPOSAL**. Provide drainage and disposal of storm water, direct or from runoff, from roofs and paved areas. The means of disposal shall preferably be to an existing storm sewer. If an existing storm sewer of sufficient capacity is unavailable, alternative means of disposal, including such options as ponds, basins, or dry wells, shall be considered. Storm water disposal shall be consistent with the Installation's storm water management plan.

8-4.1 **Prohibited Discharge**. Storm water shall not be discharged into sanitary sewers, unless it is rated as a combination system and no alternative cost-effective means is available. When storm water is discharged into a combination system, the connection at the point of combining with the sanitary waste shall include a trap.

8-4.2 **Sizing**. Sizing of the storm water drainage system shall be based on the guidance and precipitation rates shown in the IPC (reference 8b). When approved by the Design Agent, local storm data may be utilized if based on U.S. Weather Bureau specified sampling methods.

8-5 **FUEL GAS SERVICE**. Applications for fuel gas utilization in MTF's include fuel source for space heating, domestic hot water generation, cooking, generation of steam for humidification and sterilization, and as a point-of-use heat or flame source to support medical and laboratory functions. The gas service for medical and laboratory functions is discussed in the Medical Gas Systems portion of this Section. Fuel gas system design, including liquefied petroleum gas systems, shall be in accordance with NFPA 54, 58, and 59A (references 8o, 8p and 8q) as applicable.

8-6 **MEDICAL GAS SYSTEMS**. Medical gas systems include: compressed air for medical and dental patient and laboratory use; vacuum for medical and dental patient use, laboratory dust collection, waste anesthesia gas disposal; and gases for patient, laboratory, and equipment use. See Table 8-4 for general information. Medical gas systems shall be designed to be safe, reliable, and maintainable.

Table 8-4 Medical Gas Systems[1]

Reference NFPA 99, "Standard for Health Care Facilities."

Compressed Air	Appendix A Notation	Nominal Description
Medical Compressed Air	MCA	345-380 kPa (50-55 psig)
Dental Compressed Air	DCA	620-655 kPa (90-95 psig)
Laboratory Air - Dental	LA	210-245 kPa (30-35 psig)
Laboratory Air - Medical	LA	345-380 kPa (50-55 psig)
Process Air	PA	830-865 kPa (120-125 psig)
Vacuum		
Medical Vacuum	MV	51-65 kPa (15-19 in-Hg)
Dental High Vacuum	DHV	51-65 kPa (15-19 in-Hg)
Dental Low Vacuum	DLV	21-27 kPa (6-8 in-Hg)
Laboratory Dust Evacuation	LDE	10 kPa (3 in-Hg)
Waste Anesthesia Gas Disposal	WAGD	21 kPa (6 in-Hg)
Gases		
Oxygen	OX	345-380 kPa (50-55 psig)
Nitrous Oxide	NO	345-380 kPa (50-55 psig)
Nitrogen	NI	1100-1275 kPa (160-185 psig)

1. Other medical gas systems included in this Section but not in Appendix A:
Surgical Handpiece Drive Air (SHDA)
Ethylene Oxide (ETO)
Gas (natural or propane) - flame or heat source

2. This is a minimum value; vacuum controlled by healthcare provider administering the anesthesia gas.

8-6.1 **Systems for Medical Clinics**. Centrally piped medical gas/air/vacuum systems are not normally required or authorized for outpatient medical treatment clinics. If attached to an existing facility having central systems, Designers shall consider extending service lines to the clinic if life cycle cost effective.

8-6.2 **Dental Clinics**. Centrally piped systems shall normally be provided for dental compressed air (DCA), low volume oral evacuation (DLV), high vacuum oral evacuation (DHV), high volume evacuation for laboratory dust use (LDE); dental laboratory air (LA), and surgical hand piece drive air (SHDA) as required to support the planned functions. A separate system for Waste Anesthesia Gas Disposal (WAGD) may be required unless the Using Agency designates the DHV or DLV system for that purpose. Fuel gas (natural or propane) shall be provided as required to support prosthodontic and orthodontic laboratories and Dental Treatment Rooms (DTR's). For freestanding clinics with less than 5 chairs, selection of central system for gases as opposed to point-of-use systems shall be based upon life cycle cost considerations.

8-6.3 **Criteria for Medical Gas Design in the Federal Republic of Germany (FRG)**. Considerations of safety and practical constructability require that medical gas systems design for facilities in the FRG be in accordance with European Norm (EN) 737 Standards 1-4, and other EN and Deutsche Industrie Normen (DIN) standards cited therein, supplemented with the following requirements of this document and NFPA 99:

-Pipe marking labels shall be color coded per EN standard, with German language name of the gas or vacuum. In addition, a label carrying the English language name of the gas shall be affixed at the same location.

-Gas outlet and vacuum inlets shall have connections geometrically specific to a single gas or vacuum, non-interchangeable among other gases. Outlet and inlet labels shall be of a neutral color meeting EN requirements, consisting of a black or white background with white or black lettering, respectively, identifying the gas's chemical symbol. Additionally, colors on the medical gas symbols will be in accordance with NFPA 99 to assist in quickly identifying the appropriate outlet.

- Piping and source producer shall be sized to meet the maximum demand identified by this document or by NFPA 99, at distribution pressures identified herein.
- Flux shall not be used in the brazing process.
- Continuous piping purge with oil-free nitrogen gas shall be required during brazing.
- A nitrogen purge blow down of piping shall be required before

connection of the gas or vacuum outlet/inlet in accordance with NFPA 99.

- The EN 737 “Test for Particulate Testing of the Pipeline” shall be modified to meet the more rigid testing requirements of the” Piping Particulate Test” of NFPA 99.
- Two master alarm panels shall be provided for each facility. Additional alarm features required by NFPA 99, but not by EN 737, shall be provided for master, local area, and source equipment alarms panels.
- Medical gas zone valves shall be in accordance with EN737, of the ball type. Pressure gauges shall be provided on the pipelines at the valve box locations. The medical vacuum line shall include a shutoff valve similarly as the other gas services.
- Two vacuum producers, each sized for 100% of demand, shall be provided for the Waste Anesthesia Gas Evacuation (WAGE) system.

8-6.4 **Medical Gas System Testing**. Medical gas systems shall be installed and tested in accordance with NFPA 99 (reference 8r).

8-6.5 **System Control Valves**. All medical gas centrally piped systems shall be provided with shut-off valves and zone valve box assemblies in accordance with NFPA 99 (reference 8r). Additional shutoff valves shall be included as necessary to provide system section isolation for maintenance or alterations.

8-6.6 **Alarm Systems**. Medical gas alarm systems shall be provided for all central piped systems in accordance with NFPA 99 (reference 8r).

8-6.7 **Gas System Sources** (Storage). Gas system sources or storage provisions shall be designed in accordance with NFPA 99 (reference 8r).Flammable and nonflammable storage containers shall be stored in separate enclosures. Bulk oxygen storage design shall be in accordance with NFPA 50 (reference 8r).

8-6.7.1 **Point-of-Use Sources**. Point-of-use cylinders are defined as B, D, or E sizes. The Designer shall coordinate with the Using Service the provisions for point-of-use cylinder storage when their use is planned. Storage in the storage room for central system cylinder banks is permissible. The point-of-use cylinder volume shall be included in the total when determining the storage room ventilation requirements. Design shall incorporate Compressed Gas Association requirements of Pamphlet P-2 (reference 8t).

8-6.7.2 Alternative Compressed Air Sources. Alternative compressed air sources such as pneumatic control air or shop air compressors shall not be used as a source for medical compressed air, dental compressed air, laboratory air, process air, or surgical hand piece drive air.

8-6.8 **Color Coding and Labeling**. Labeling and color identification of piping shall be in accordance with NFPA 99 (reference 8r) and the CGA Pamphlet C-9 (reference 8u). System components shall also be labeled for identification to prevent

tampering and inadvertent closing. In particular, shutoff valves and pressure gauges shall be labeled in accordance with NFPA 99 (reference 8r).

8-6.9 **Medical Gas Systems Outlets**. Appendix A contains guidance for allocation and location of medical services and outlets in the various spaces within an MTF. The amount represents the required number of outlets unless the Using Service specifies less. The Designer shall coordinate the gas types and outlet quantities with the Using Service. Additional outlets and gas types may be provided when justified by the Using Service to TMA. All outlets shall comply with the latest edition of NFPA 99 (reference 8r) and the requirements of Compressed Gas Association Pamphlet V-5 (reference 8v). There are DISS and Quick Connect type outlets, with two primary different configurations of the Quick Connect outlet. Therefore, designer shall also coordinate the outlet type configuration with the Using Service so that the Users will not have to use an outlet adapter for their existing medical equipment.

8-6.9.1 Outlets for Non-Medical Function Use. The use of a central medical gas system to serve an outlet that indirectly supports the medical function such as in a laboratory may be justified. If so, the branch piping and outlets shall be in accordance with NFPA 99 (reference 8r). Non-medical uses are not permissible except for unique circumstances with documented waiver requests, coordinated with the Using Service and Design Agent, reviewed individually.

8-6.10 **Emergency Power Source**. Life-critical medical gas system equipment, requiring electrical power for generation, operation, or alarm, shall be connected to an emergency power source. At the discretion of the Design Agent, when requested by the Using Service, dental compressed air, vacuum, and medical gas systems serving anesthetizing treatment rooms in outpatient and dental treatment clinics may be connected to an emergency power source. Refer to the Electrical Section of this document for connection design guidance.

8-6.11 **Medical Compressed Air** (**MCA**). The MCA system shall be an independent central piped system consisting of two or more medical air compressors and a central receiver, all conforming to the requirements of NFPA 99 (reference 8r). It shall be used only for medical functions requiring breathable air to support respiration or for air-driven instruments that discharge into the pharynx. The MCA system shall not be used to satisfy any other compressed air requirements. The system design shall include automatic operation of the compressors, including alternating lead/lag status.

8-6.11.1 Air Quality Standards. The medical air compressor(s) shall be specifically designed and manufactured for this purpose. MCA quality shall be as defined in NFPA 99 (reference 8r). Intake air shall be direct from outdoors or another source of equal or better quality located in accordance with NFPA 99 (reference 8r). Designers are responsible to size and show routing of medical air intake piping.

8-6.11.2 General Requirements. MCA shall be provided by two or more compressors with provisions for automatic, alternating, and simultaneous operation. The compressors shall be sized such that if any one compressor fails, the remaining compressor(s) shall provide 100% of maximum system demand. Provide an alarm to

indicate compressor failure that annunciates at the master medical gas alarm panel. All system components downstream of the compressors shall be sized for 100% standard system demand and be duplexed. The receiver shall have an automatic drain feature specified

8-6.11.3 Air Drying. System design shall include an air dryer of either the mechanical refrigeration or desiccant type. Designers shall closely coordinate with the Using Agency for each project, to determine whether operating conditions, facility maintenance capabilities, air dryness limitations, or other factors favor preference of one type over the other for the given application. Designers are responsible to consider the following:

a. When mechanical refrigeration systems are specified, designers shall include specification of a cycling feature for all systems under 3.7 kW (5 horsepower (hp), to minimize the possibility of icing and moisture carry-over. Designers shall evaluate whether anticipated flow conditions will require the cycling feature for systems3.7 kW (5 hp) and over.

b. When desiccant systems are specified, designers shall consult the Using Agency on dryness limitations. Desiccant dryers are capable of drying the air to a dewpoint as low as –40 degrees C (-40degrees F), which may be considered too low for some medical or dental applications. When required by the User, the design shall include specification of equipment accessories that will permit upward adjustment of air moisture to the required dewpoint.

c. The relative advantages and disadvantages of mechanical refrigeration dryers and desiccant dryers generate questions. Good arguments may be made for in favor of either dryer type. Both systems can be successfully utilized in MTF's if project-specific conditions and User needs are taken into account and the equipment is properly specified. Additional general information of this topic is provided in Annex A at the end of this Section.

8-6.11.4 **MCA Demand**. System demand shall be calculated utilizing the peak flow and simultaneous use data in Table 8-5, as a minimum. The simultaneous use factors shall be used with judgment and modified to adapt to special conditions if required.

Table 8-5. Medical Compressed Air System Demand

Space/Equipment	Design Flow in L/s (SCFM) Per Unit	Per Room	Per Bed	Per Outlet	Usage Factor %
Anesthetizing Locations:					
Special Surgery & Cardio-Vascular			0.2(0.5)		100
Major Surgery & Orthopedic		0.2(0.5)			100
Minor Surgery		0.2(0.5)			75
Emergency Surgery		0.2(0.5)			25
Radiology		0.2(0.5)			10
Cardiac Catheterization		0.2(0.5)			10
Ventilators	1.7(3.5)				100
Delivery Room		0.2(0.5)			100
Acute Care Locations:					
Recovery Room/Surgical			0.9(2.0)		25
ICU/CCU			0.9(2.0)		50
Emergency Room			0.9(2.0)		10
Neonatal ICU			0.7(1.5)		75
Dialysis Unit			0.2(0.5)		10
Recovery Room/O.B.			0.9(2.0)		25
Subacute Care Locations:					
Nursery		0.2(0.5)			25
Patient Rooms		0.2(0.5)			10
Exam & Treatment	0.5(1.0)				10
Pre-Op Holding				0.7(1.5)	10
Respiratory Care	0.5(1.0)				50
Pulmonary Function Lab				0.5(1.0)	50
EEG & EKG				0.5(1.0)	50
Birthing & Labor/Delivery	0.5(1.0)				50
Other:					
Anesthesia Workroom		0.7(1.5)			10
Respirator Care Workroom	0.7(1.5)				10
Nursery Workroom		0.7(1.5)			10
Equipment Repair		0.7(1.5)		0.7(1.5)	10
Med. Laboratory				0.7(1.5)	25

NOTE: This is a generic listing that must be applied to the specific room names listed in Appendix A.

8-6.12 **Dental Compressed Air (DCA)**. A central piped dental compressed air (DCA) system with two or more compressors and other components described herein shall be provided in accordance with NFPA 99 (reference 8r), Level 3 compressed air systems. DCA shall be used for drying applications during dental procedures and as a power or drive source for lifts, locks, and pneumatic dental instruments and equipment. DCA, unlike MCA, is not used for breathing or respiratory support of any kind and shall not be used to satisfy MCA requirements. Air that is normally used for dental laboratory restorative and fabrication techniques may be provided by the DCA system. Refer to 8-6.15, for handpiece drive air requirements.

8-6.12.1 Air Quality Standard. DCA quality shall be as defined in NFPA 99 (reference 8r), Level 3 compressed air systems. Intake air shall be direct from outdoors or of quality better than outside air.

8-6.12.2 DCA Components. DCA shall be provided by two or more equally sized compressors, with provisions for automatic, alternating, and simultaneous operation. Each compressor shall be sized such that if anyone compressor fails, the remaining compressor(s) shall provide 65% of standard demand. Provide an alarm to indicate compressor failure that annunciates to the master medical gas alarm panel. All system components downstream of compressors shall be sized for maximum combined compressor output. In-line pressure regulators shall be provided when DCA and dental LA systems are served by a common compressor. Each laboratory supply main shall have a pressure regulator. Dryer type may be of either the mechanical refrigeration or desiccant type, according to project specific operational requirements and the User's needs. Refer to 8-6.11.3 above and Annex A at the end of this Section for additional information.

8-6.12.3 DCA System Demand. The system shall be sized using the following criteria.

a. Select a DTR Usage Factor:

Number of DTR's	DTR Usage Factor (DUF
1-3	1.0
4-6	0.9
7-12	0.8
13-19	0.7
20 and up	0.6

b. DTR Demand = No. of DTR's X 1.42 L/s X DUF

c. Select a lab usage factor:

Number of Technicians	Lab Usage Factor (LUF)
1-5	0.6
6-10	0.5
11-19	0.4
20 and up	0.3

d. Lab Demand =

No. of Technicians X 0.472 L/s X LUF
+ No. of sand/shell blasters X 1.888 L/s X LUF
+ No. of air chisels X 1.415 L/s X LUF
+ No. of denture presses X 0.472 L/s X LUF
+ No. of microblasters X 2.831 L/s X LUF
+ No. of high speed hand pieces X 1.415 L/s X LUF

e. Sterilization demand = No. of hand piece purge stations X 0.472 L/s.

f. Standard demand = DTR demand + Lab demand + Sterilization demand.

g. Select the optimum compressor grouping:

COMPRESSOR GROUPING

Type	System Usage Factor (SUF)
Duplex	0.65
Triplex	0.33
Quadplex	0.25

h. Compressor size = SUF X Standard demand

i. The receiver shall be sized based on Table 8-6.

Table 8-6. Receiver Size

Number of DTR's	Liters (Gallons) per DTR
1 -6	34(10)
7 -9	30(9)
10 – 12	26(8)
13 - 15	23(7)
16 - 18	19(6)
19 - 21	15(5)
Over 21	15(4)

8-6.13 **Laboratory Air (LA)**. The medical or dental laboratory air (LA) system shall be a central piped system consisting of two or more compressors and a central receiver, all conforming to the requirements of NFPA 99 (reference 8r).

8-6.13.1 Air Quality Standard. Air compressors used for LA shall be specifically designed and manufactured for this purpose. LA quality shall be in accordance with the dental compressed air (DCA) requirements defined in 8-6.12.1. Intake air shall be direct from outdoors or of quality better than outside air (e.g., profiteered outdoor air or relieved return air). Locate intake in accordance with DCAs requirements as defined in NFPA 99 (reference 8r), Level 3. LA shall be supplied at a minimum of 210 kPa (30 psig) for dental laboratories and 345 kPa (50 psig) for medical laboratories, with a +35 kPa (5 psig) tolerance.

8-6.13.2 LA System Components. LA shall be provided by two equally sized compressors with provisions for automatic, alternate, and simultaneous operation. Each compressor shall be sized to provide 65% of maximum demand. Provide an alarm to indicate compressor failure that annunciates to the master medical gas alarm panel. All system components downstream of compressors shall be sized for maximum combined compressor output. A DCA compressed air generator package used to service a LA system shall be supplied by a dedicated main located just downstream of the final package component and inside the equipment room.

8-6.13.3 LA System Demand. The LA system flow demand shall be determined by the number of work stations and their function plus the requirements for laboratory equipment. The using Military Department shall provide this information. The designer in conjunction with the Design Agent shall establish the flow rates. Medical LA system flow rate demand shall be 0.5 L/s (1 cfm) per outlet. Dental LA system flow rate demand is determined by the sizing procedure shown in 8-6.12.3. The simultaneous use factors shall be as follows in Table 8-7:

Table 8-7. Medical Laboratory Air System Demand

No. of Outlets	Use Factor	Minimum L/s (CFM)
1-2	100	
3-12	80	1.4 (3)
13-38	60	4.7 (3)
39-115	40	11.8 (25)
116-316	30	23.6 (50)
317-700	20	44.8 (95)

8-6.14 **Instrument Air** (**IA**). An Instrument Air (IA) system is intended to be used to power medical devices not related to human respiration (e.g. to power surgical tools, surgical arms, and surgical columns). This system may be utilized in lieu of a high pressure piped nitrogen (NI) system. The using Military Department in conjunction with the Design Agent will identify IA requirements. IA shall not be used to satisfy Medical Air (MA) requirements. IA systems shall be designed in accordance with the requirements of NFPA 99 (reference 8r).

8-6.14.1 Air Quality Standard. Air compressors used for IA shall conform to the requirements of NFPA 99. Instrument air quality shall be as defined in NFPA 99 (reference 8r). It is recommended that intake air be direct from outdoors, but it is permitted to be within the equipment room.

8-6.14.2 IA System Components. The number of compressors for an IA system shall be a function of the application; however, at least two compressors or one compressor with a standby header must be provided as a minimum. Coordinate the compressor arrangement with the Using Service's Design Agent. Each compressor shall be sized to provide 100% of the demand. Provide an alarm to indicate compressor failure that annunciates to the master medical gas alarm panel in accordance with NFPA 99 (reference 8r). All system components downstream of compressors shall be sized for 100% of the system peak demand.

8-6.14.3 IA System Demand. The number of workstations and their functions plus the requirement of any equipment shall determine the IA system flow demand. The using Service shall provide this information. The designer in conjunction with the Design Agent shall establish the flow rates.

8-6.15 **Surgical Handpiece Drive Air** (**SHDA**). SHDA may be used as a substitute for nitrogen to power pneumatic surgical handpieces used in dental procedures. SHDA is not used for breathing or respiratory support. SHDA must be a separate system from DCA and dental LA; however, DCA may be used as a first stage of compression.

8-6.16 **Medical-Surgical Vacuum System** (**MV**). The medical vacuum (MV) system shall be a centrally piped, dry vacuum system containing two or more continuous duty pumps with a central receiver. The system shall meet the requirements of NFPA 99 (reference 8r) and shall be sized so that if one pump fails, the remaining pump(s) can supply 100% of the total system demand. The system design shall include automatic operation of the vacuum pumps including alternating lead/lag status. Provide

an alarm to indicate vacuum pump failure that annunciates to the master medical gas alarm panel.

8-6.16.1 Applications. The MV shall be used only for medical functions involving patient care, therapy, and diagnostic functions as described below. It may also serve DHV requirements for dental treatment rooms and oral surgeries, and small laboratories in patient care areas that function in direct support of medical functions. Analysis, research or teaching laboratory located within a medical treatment facility may also be served by the MV, provided that a separate system connection or main is provided at the vacuum receiver, with a shutoff valve and trap with a drain valve. A laboratory not supporting medical functions shall have a vacuum system separate from the MV.

8-6.16.2 Demand. Vacuum system pumps and piping shall be sized in accordance with NFPA 99 (reference 8r) "Recommended Vacuum Source Sizing" and "Recommended Minimum Pipe Sizing." Note to “round up” pipe sizes, especially those serving operating rooms including the risers and laterals. Ascertain the intended staff operational procedures to determine the need for an additional factor of safety. Indiscriminate opening of vacuum inlets for extended periods, whether in service or not, requires a factor increase in demand and pipe sizing. Also, the intended use of “Y-connectors” as a means of increasing available inlets is not recommended. A justified need for a vacuum inlet shall be accommodated with another wall inlet, not a Y-connector. Verify with the User’s representative that the number of vacuum inlets proposed will support the planned medical function operation without the use of Y-connectors.

8-6.16.3 Performance. System pressure drop shall be a maximum of 10 kPa (3 in-Hg) at the calculated demand flow rate. A flow rate of 1.4 L/s (3 scfm) per inlet, with no equipment attached, shall be measured while maintaining 41 kPa (12 in-Hg) vacuum at the farthest inlet. The 1.4 L/s (3 scfm) without equipment is equivalent to the recommended 0.7 L/s (1.5 scfm) with.

8-6.16.4 Slide Brackets. Vacuum bottle slide brackets shall be provided for all medical vacuum inlets. Vacuum bottles shall be used at all vacuum inlets to prevent liquids and solids from entering the piping network. Vacuum bottles shall be provided with an overflow shut-off device to prevent carry over of fluids or solids into the piping system. Brackets shall be positioned to provide proper clearance for flow meters and adapters and to eliminate conflict with electrical receptacles. Thus, it is recommended that the vacuum outlet be located at either end of a group of medical gas outlets, with the slide bracket to the outside, e.g. in a healthcare station head wall unit. If two vacuum inlets are required at a given station, locate one at each end of the outlet group with the slide brackets to the outside. It is critical to coordinate vacuum inlet and slide locations with the Architectural Designer and the User’s representative to avoid interference with other items without compromising the medical function.

8-6.16.5 Exhaust. Vacuum shall be exhausted in accordance with NFPA 99 (reference 8r).

8-6.17 **Dental High Vacuum** (**DHV**). A central DHV system may be supplied for areas in dental clinics where MV is required as specified in Appendix "A." This system is also a dry system with a central piped distribution system and receiver; no liquids or solids shall be transported in the distribution system. Individual separators shall be located in each applicable DTR. The system shall consist of two or more vacuum pumps and a central receiver. System shall be sized so that upon failure of one pump the remaining pump(s) shall maintain the minimum vacuum specified while providing 100% of the calculated demand. The system design shall include automatic operation of the vacuum pumps including alternating lead/lag status. Provide an alarm to indicate vacuum pump failure that annunciates to the master medical gas alarm panel. For dental clinics located in a hospital, the MV system may be used in lieu of a DHV system.

8-6.17.1 Performance. A minimum vacuum of 65 kPa (19 in-Hg) shall be maintained at the receiver. System pressure drop shall be such that the most remote inlet will have a minimum vacuum of 41 kPa (12 in-Hg) under peak demand conditions. System pressure drop shall be a maximum of 10 kPa (3 in-Hg) at the calculated demand flow rate.

8-6.17.2 Demand. System demand shall be calculated based on 0.9 L/s (2 SCFM) for each DTR DHV inlet with the demand factors in Table 8-9:

Table 8-9. DHV Demand Factors

No. of DTR DHV Inlets	Use Factor
1 – 6	1.0
7 – 10	0.8
Over 10	0.6

8-6.18 **Dental Low Vacuum** (**DLV**). A central low vacuum, high volume oral evacuation system or DLV shall be installed in dental clinics to provide scavenging, collection, and disposal of liquids, solids, and aerosols from dental procedures. This is a wet system with liquids and solids transported through wetted piping from the collection point to one or more liquid/air separator tanks located upstream of two or more vacuum pumps. The tank serves as a collector for the fluids and solids and provides a means of automatic draining for them by being connected, indirectly, to the sanitary sewer. The tank draining system may include an automatic wash down feature for larger systems in an MTF having greater than 10 DTR’s. The system shall meet the requirements of NFPA 99 (reference 8r) Level 3 vacuum systems. The vacuum pumps shall be sized so that when one pump is inoperable, the remaining pump(s) shall provide the above vacuum pressure and fluid flow for a minimum of 70% of the system demand. The system design shall include automatic operation of the vacuum pumps including alternating lead/lag status. Provide an alarm to indicate vacuum system fault (e.g. pump failure) that annunciates to the master medical gas alarm panel. Protocol shall include alarm initiation when a pump does not operate when called for and when a pump operates when not called for.

8-6.18.1 Components. The service inlet normally is floor mounted in a utility center at the dental chair, or wall mounted with a means of connection to clinical end items such as the high volume hose. The separator(s) shall receive all liquid, air, and solids

upstream of vacuum pump(s). Liquids and solids shall be discharged from the separator(s), with piped gravity flow through an air gap into a trapped and vented receptor (e.g. a floor drain or sink, or standpipe receptor for small system suspended tank installations) connected to the sanitary waste system. Local codes may require the use of an amalgam separator between the separator tank and the sanitary waste system to control the discharge of mercury into it. Refer to 8-3.8 for additional guidance. Coordinate with the Installation or local regulatory agency when discharge is to a public sanitary system. For government operated systems, coordinate with the using Military Department or the Installation. The separator tank shall discharge a minimum of once during a 24-hour interval for a one-tank system, when a high liquid level sensor activates for a two-tank system, or multiple daily discharges as recommended by the manufacturer. Separator overflow protection shall be included to protect during periods of abnormal usage or when the automatic discharge malfunctions.

8-6.18.2 Performance. The system operating range shall be 21 to 27kPa (6 to 8 in-Hg). A minimum vacuum of 21 kPa (6 in-Hg) shall be maintained at the farthest inlet. System pressure drop shall be a maximum of 3 kPa (1 in-Hg) at the calculated demand flow rate. A flow rate of 3.3 L/s (7 scfm) per inlet shall be measured while maintaining 21kPa (6 in-Hg) at the farthest inlet.

8-6.18.3 Demand. The system demand shall be calculated based on 3.3L/s (7 scfm) per inlet-nozzle orifice. To offset piping and component losses, increase the demand flow rate by the appropriate factor from Table 8-10.

Table 8-10. Demand Flow Rate Increase

Number of Inlets	Increase (%)
1-20	10
21-40	15
41 and above	20

The demand usage factor is normally 100 percent. Verify the specific usage factor with the User and the Design Agent.

8-6.18.4 Separator Tank. The separator/collector tanks shall be sized according to Table 8-11.

Table 8-11. Seperator Tank Sizing

	Separator Tanks	
Number of DTR's	Quantity	Minimum Size L (Gal)
1- 6	1	76 (20)
7-10	1	152 (40)
11-20	1	304 (80)
21-30	2	152 (40)
31 and above	2	10.5 (2.75) per DTR

An alternative separator tank-sizing factor is 10.45 liters (2.75gallons) per DTR. The use of multiple tanks can be considered for the lower number of DTR’s if continuous

operation is necessary. Tank drainage piping shall slope from the tank discharge point down to the discharge point at the floor drain or standpipe receptor.

8-6.18.5 Equipment Location. The DLV equipment shall be located on or below the DTR floor level. The separator tank location shall be near the pump at the same level or directly above or below whenever feasible. When space constraints are unavoidable, after coordination with the Design Agent and using Service, or other circumstances dictate, vacuum pumps may be located above and remote from the separator tank. The pipe shall then be sized to maintain system pressure loss within the maximum limit. The tank drain valve discharge shall be a minimum 150 millimeter (0.5 foot) above the floor to accommodate the pipe slope, drain line turndown and the indirect connection air gap to the sanitary drainage system receptor. The sanitary waste centerline of pipe shall be a minimum 0.34meter (1 foot) below the floor to accommodate the floor drain trap. The equipment room shall be located as near the DTR's as possible to minimize distribution piping bends and pipe length. Equipment placement in the mechanical room shall be arranged to provide the most direct connection to the distribution piping, the sanitary waste line, and the exhaust discharge point, in that order.

8-6.18.6 Piping Distribution. The piping run from the dental utility center, located on or recessed into the floor, should continuously slope back to the vacuum source equipment with limited rise, to facilitate transportation of fluids and particulate. Minimum required slope is 0.65centimeter per 3.0 meter (1/4 inch per 10 feet). Vacuum shall be increased from the level specified in Table 8-4 at the rate of 1 in-Hg for every 1.1 foot of rise. Distribution system piping encased in the slab or buried below the slab shall be a minimum 50 millimeter (2 inch) in diameter. Where maintenance access is required, piping shall be installed in accessible locations in covered trenches, tunnels, or crawlspaces. Provide cleanout fittings at every change of direction greater than 45 degrees. Minimum access space shall be 600 milimeter (2 feet) minimum to within 600 milimeter (2 feet) of the cleanout and a minimum 150 millimeter (0.5 foot) from this point to the cleanout. Specify DWV fittings to facilitate movement of solids. Enlarging the pipe size shall be considered depending upon availability of the DWV fittings and relative pipe costs. When overhead pipe routing cannot be practicably avoided, provide cleanout fittings at the base of all risers and observe the following requirements:

a. Minimize lift height by locating overhead horizontal pipe run as close to floor as possible.

b. Vertical pipe run from inlet to overhead pipe shall be a minimum 40-millimeter (1½-inch) diameter.

c. Overhead pipe shall be not less than 40 millimeter (1½ inch) minimum in diameter.

d. The vertical pipe shall "tee" into the top of the overhead branch main.

e. The available vacuum level to satisfy performance requirements stated in 8-6.18.2 shall be based on a reduction of the pump-generated vacuum at the rate of 3kPa (1 in-Hg) for each 0.33 meter (1.1 foot) rise.

8-6.18.7 Exhaust. The exhaust pipe material and size, including the connection to the equipment discharge point, shall be in accordance with manufacturer's recommendation. The number of bends and total length shall be minimized. The exhaust piping shall be a dedicated run from the equipment connection to the discharge point outside the MTF. It shall not be connected to any other piping, such as a plumbing vent line. The exhaust line shall be protected from backflow of air or liquids by detailing an appropriate discharge arrangement, such as a gooseneck or shroud with screen with a check valve, or using a flapper valve approved by the manufacturer. The discharge point shall be separated a minimum of10 meters from the dental or medical compressed air system intakes and any HVAC system outdoor air intake(s).

8-6.19 **Central Dental High-Volume Laboratory Dust Evacuation** (**LDE**).The LDE system shall scavenge and centrally separate, filter, and collect material trimmings, grinding debris (toxic and nontoxic), and particulates from polishing and finishing operations in the dental laboratory. Point of use dust collection may be provided for some operations per using Military Department requirements.

8-6.19.1 System Components. The LDE system for dental laboratories shall consist primarily of one belt-driven vacuum pump complete with a preset, field-adjustable ingestion valve, exhaust silencer, and a central cyclonic separator with a filter bag system.

8-6.19.2 Performance. The vacuum at the farthest inlet shall be a minimum of 4.2 kPa (1.25 in-Hg). A flow rate of 28 L/s (60 scfm) per technician work station inlet and 71 L/s (150 scfm) per equipment item inlet shall be measured while maintaining the 10 kPa (3 in-Hg) at the separator. Verify the equipment requirements with the using Military Department.

8-6.19.3 Demand. The system demand shall be calculated based on the inlet flow rate requirement. Apply the usage factor values shown in Table 8-12 for the given number of inlets.

Table 8-12. LDE System Utilization Factors

Lab Size (# of inlets)	Usage Factor (Percent)	Separator Filter m^2 (Sq. Ft.)
1 to 4	100	5.6 (60)
5 to 10	80	11.2 (120)
11 to 15	70	14.9 (160)
16 to 24	60	20.5 (220)

8-6.20 **Waste Anesthesia Gas Disposal (WAGD)**. The WAGD system shall be a centrally piped, dry vacuum system containing two or more continuous duty pumps with a central receiver. It shall meet the requirements of NFPA 99 (reference 8r) and be sized so that if one pump fails, the remaining pump(s) can supply 100% of the total system demand. The system design shall include automatic operation of the vacuum pumps including alternating lead/lag status. Provide an alarm to indicate vacuum pump failure that annunciates to the master medical gas alarm panel.

8-6.20.1 Applications. Disposal of waste anesthesia gas shall be incorporated into the MTF design. A dedicated Waste Anesthetic Disposal (WAGD) system shall be provided in accordance with NFPA 99 (reference 8r). When permitted by NFPA 99, the vacuum system may be used for WAGD in dental clinics. Inlets shall be provided in anesthesia locations. Verify that the system vacuum pump is suitable for the high oxygen and nitrous oxide exhaust content associated with anesthetizing procedures.

8-6.20.2 Demand and Performance. Designers shall coordinate with the Using Agency the vacuum demand level and flow requirements.

8-6.20.3 Exhaust. Vacuum shall be exhausted in accordance with NFPA 99 (reference 8r).

8-6.21 **Oxygen** (**OX**). Oxygen (OX) is used in the gaseous state to sustain life through direct delivery to the patient. Oxygen can be stored as a gas in cylinders or as a liquid in bulk tanks. It is classified as a nonflammable gas; however it can increase the range of flammability of other materials and gases when present in sufficient concentration. Its storage requires proper construction and ventilation, in accordance NFPA 99 and NFPA 50 (references 8r and 8s). The oxygen system shall not be used to supply non-patient uses, including equipment in laboratories or medical equipment maintenance/repair shops. Separate point-of-use services shall be used for such non-patient applications.

8-6.21.1 Provision of Central Systems. When justified by the number of required outlets and frequency of use, central oxygen storage and distribution systems shall be provided, such as is typically the case with medical centers, hospitals, and large ambulatory care centers. Point-of-use (“roll-in”) cylinders should be utilized for clinical applications involving few oxygen outlets and infrequent utilization.

8-6.21.2 Emergency Connection. Provide an emergency oxygen supply connection on the building exterior when the oxygen supply system is located outside of the building. This connection shall be used as a temporary auxiliary source of supply. Valving and pressure control devices shall be in accordance with NFPA 99 (reference 8r).

8-6.21.3 System Demand. The piping system shall be designed to deliver 20 L/min (0.7 cfm) at the outlet, utilizing a 100% usage factor for outlets in critical areas and the factors in Table 8-13 for outlets in other areas. Historical usage data from replaced or similar MTF’s maybe used as a guideline when determining system demand instead of the method presented in 8-6.21.4. Refer to 8-6.21.5 below for additional design considerations for determining the required capacity of liquid bulk tanks.

Table 8-13. Oxygen System Utilization Factors

Number of Outlets	Percent Usage
1-3	100
4-12	75
13-20	50
21-40	31
41 or more	25

8-6.21.4 Storage Capacity Sizing Method. In the absence of available historical oxygen consumption data, Table 8-14 shall be used in estimating required system storage capacity for MTF's having large inpatient populations (e.g. hospitals and medical centers). For facilities with predominantly outpatient functions, designers shall work with the Using Service to estimate consumption rates and appropriate storage capacities.

Table 8-14. Cylinder Manifold Systems

Number of Beds	Minimum Number of Cylinders[1]
1 - 50	8
51 - 75	12
76 - 100	16
101 - 125	20
126 - 150	24
Over 150	Requires special study[2]

[1] Per bank of "H" cylinders
[2] The special study shall include an analysis of an appropriate diversity factor and the cost effective option between cylinder and bulk storage.

Little published data is available at present to help establish oxygen consumption on a per-outlet basis in predominantly outpatient facilities. Oxygen usage rates and procedural duration vary widely depending upon the clinical application. For example, a typical surgical procedure begins with a preparatory oxygenating period of up to 10 minutes at a consumption of 6 to 8 L/min (0.2 to 0.3 cfm). During the actual procedure, the usage rate decreases to 1 to 3 L/min (0.04 to 0.11 cfm) for a time period ranging from a fraction of an hour to several hours depending upon the nature of the surgery. A post-surgical de-nitrogenizing period of up to 10 minutes at 6 to 8 L/min (0.2 to 0.3 cfm) follows. Post-operative demands range as high as 18 L/min for recovery rooms with an average stay that ranges from 30 to 120 minutes. Oral surgery procedures usually involve a 6 L/min rate throughout the procedure. Specialty applications (e.g. pediatrics) tend to demand relatively higher usage rates. Because of these wide variations, Designers shall closely coordinate with the Using Agency to establish system demand and size satisfactory storage capacity.

8-6.21.5 Liquid Bulk-Tank Storage. Designers shall coordinate with the Using Agency to consider the economic aspects of storage capacity. Excessive capacity translates to higher utilization costs due to boil off. Too little capacity may lead to higher costs because of more frequent tank refills, which includes vented oxygen cost as well as delivery fees. Designers shall also consider the availability of oxygen refill service.

For remote locations, oversized capacity may be more practical and economical to minimize deliveries and provide for unexpected consumption increases. The selection between purchasing or leasing the bulk storage tank and ancillary equipment shall be coordinated. Both economic and logistic factors relative to the given supplier(s) shall be considered.

The standard tank sizes are shown in Table 8-15. The tanks are normally leased with monthly rates typically ranging from $250 to $2000. Life cycle cost analysis will frequently show purchasing the liquid tank to be the more economical choice. In evaluating the costs associated with liquid services, be aware that the unit gas cost varies significantly with total delivery volume, presently from $0.75 to $1.25 per gallon for a 1895 liter (500 gallon) delivery, to as low as $0.40 to $0.45 per gallon for 34,065 liters (9000 gallons). Balance this consideration with boil-off costs. The average daily boil-off rate is approximately 0.5% of total tank volume.

Table 8-15. Oxygen Bulk Tank Sizes

Liters	Gallons
1,895	500
5,680	1,500
11,355	3,000
22,710	6,000
34,065	9,000
41,635	11,000
49,205	13,000
68,130	18,000
75,700	20,000

Fill (or purge) losses associated with the tank refill process may be significant. In tanks with a bottom-fill feature, gaseous oxygen must be purged prior to refill to lower the tank pressure below that of the delivery vessel, i.e. tanker truck. Depending upon local service availability, there are tank types and filling equipment which can minimize these losses. Top-filled tanks may be serviced without purge losses, if filling equipment is available with suitable pumps for overcoming tank pressure or utilizing the “top collapse” feature. These should be specified when available. The top-filling procedure must be conducted only by trained personnel to avoid uncontrolled system pressure drop below minimum service levels.

8-6.21.6 System Monitoring. The central oxygen system design shall facilitate oxygen system purity monitoring with an outlet placed in the biomedical maintenance area, or other area, as directed by users. This outlet shall be upstream (on the source side) of all other oxygen outlets.

8-6.22 **Nitrous Oxide (NO)**. Nitrous oxide is an anesthetic gas capable of inducing the first and second stages of anesthesia when inhaled. It is classified as a nonflammable gas; however, it can increase the range of flammability of other materials and gases when present in sufficient concentration. Its storage requires proper construction and ventilation in accordance with NFPA 99 (reference 8r).Nitrous oxide

manifolds shall not be located outside in cold climates due to the low vapor pressure of nitrous oxide at low temperatures.

8-6.22.1 System Demand. The piping system shall be designed to provide for a demand of 20 L/min (0.7 cfm) per outlet with the usage factors from Table 8-16 (reference 8x).

Table 8-16. Nitrous Oxide System Utilization Factors

Number of Outlets	Percent Usage
1-3	100
4-12	75
13-20	50
21-40	31
41 or more	25

For determining storage capacity for predominantly inpatient facilities, Designers may use Table 8-17. For predominantly outpatient facilities, designers shall determine storage requirements from historical consumption data of similar facilities, or by consulting the Using Agency as to the probable flow rate and duration for the planned healthcare procedures.

Table 8-17. Nitrous Oxide System Manifold Sizing

Number of Beds	Number of Cylinders/Bank[1]
50 - 100	2 expandable to 4
100 - 250	4 expandable to 6
250 - 500	6 expandable to 8
500 or More	Special Study[2]

[1] Based on "G" cylinders and one complete change each week.
[2] The special study shall include an analysis of an appropriate diversity factor and the cost effective Option between cylinder and bulk storage.

8-6.23 **Nitrogen** (**NI**). Nitrogen is an inert gas primarily used as an operating or driving means for medical and dental hand pieces and equipment, and as an inert gas environment for laboratory uses. The cylinder manifold system shall be designed and installed in accordance with NFPA 99 (reference 8r).

8-6.23.1 Control Cabinet. Each individual nitrogen use location (e.g., individual operating room, dental treatment rooms) shall be provided with a nitrogen control cabinet with pressure gauges and pressure regulating valves for the purpose of independently regulating pressures at that location.

8-6.23.2 Demand. The piping system shall be suitable to deliver 7 L/s (15 cfm) per outlet, with a demand usage factor of 100 percent. For the purpose of determining storage capacity, designers shall analyze the nitrogen demand of the tools and equipment intended for that facility, in consultation with the Using Service. When this information is not available, the required storage capacity may be estimated using Table 8-18 (reference 8x).

Table 8-18. Manifold Sizing for Nitrogen System

Number of Using Locations	Cylinders per Bank *
1-4	2
5-8	3
9-12	4
13-16	5
17-20	6
21-24	7
25-28	8

* Assumes "H" cylinders and one complete change each week.

8-6.24 **Sterilization Gas**. Gas/vapor sterilization may be used for treating contaminated medical equipment, implements, and certain infectious waste. In this method, the sterilizing agent is a gaseous or vaporized chemical. The two most commonly used chemicals are ethylene oxide (ETO) and formaldehyde, which may be carcinogenic.

8-6.24.1 Ethylene Oxide. All precautions in the use of ETO as outlined by OSHA (reference 8y) and NIOSH CIB 52 (reference 8z) shall be strictly followed. ETO is regarded as a potential occupational carcinogen.

a. Layout. Where ETO is planned in a facility, a separate room for sterilizer, ETO supply cylinder, and associated piping shall be provided. Access to this equipment and storage room shall be from the Central Material Service work area only. The front of the sterilizer shall be accessed from the loading room.

b. Components. The cylinder supply line shall have a three-way valve to permit exhausting residual ETO vapors prior to changing the tanks. The supply, tank, and vent valves shall be labeled.

c. Ventilation. Ventilation shall also be provided for the waste gases from the sterilizer evacuation line and the drain air gap. See the Heating, Ventilating and Air Conditioning Section for exhaust system design guidance.

d. Emission Control. Some states have adopted legislation that prohibits the release of ETO sterilizer exhaust gas to the atmosphere. Presently the only available ETO emission control technology is based on a chemical conversion or scrubber. The design shall incorporate the necessary provisions to comply with both federal and state legislation. Local requirements shall be coordinated with the using Military Department and Design Agent.

8-6.25 **Process Gas**. Process gas is natural or propane that is used as a point-of-use heat or flame source. The process is typically found in laboratories and sometimes in other areas such as equipment repair and DTR's to support medical or

dental functions. The gas system design shall be in accordance with NFPA 54 and 58 (references 8o and 8p).

8-6.25.1 Load. The load is the sum of the consumption rates for the given apparatus or equipment to be serviced. Laboratory burners are typically sized at 1465 W (5,000 Btuh) for small burners and 3075 W (10,500 Btuh) for large burners. For other equipment such as casting ovens, use manufacturer's data.

8-6.25.2 Demand is based upon the number of outlets shown in Table 8-19.

Table 8-19. Process Gas Utilization Factors

Number of Outlets	Percent Usage (%)
1-8	100
9-16	90
17-29	80
30-79	60
80-162	50
163-325	40
326-742	35
743-1570	30
1571-2900	25
> 2900	20

REFERENCES

8a. UFC 3-420-01 "Design: Plumbing Systems"

8b. International Code Council (ICC), "International Plumbing Code."

8c. National Association of Corrosion Engineers (NACE), "Book of Standards and Their Applicable Recommended Practices."

8d. Center for Disease Control and Prevention, "Guideline for Prevention of Nosocomial Pneumonia."

8e. American Society of Heating, Refrigerating, and Air-Conditioning Engineers, Inc, ASHRAE Guideline 12-2000, "Minimizing the Risk of Legionellosis Associated with Building Water Systems."

8f. American Society for Healthcare Engineering/Joint Commission on Accreditation of Healthcare Organizations, "Waterborne Pathogens–Compliance with JCAHO Requirements."

8g. American Society of Testing and Materials, ASTM D 1193, "Reagent Water."

8h. American Society of Heating, Refrigeration and Air-Conditioning Engineers, ASHRAE Handbook, “HVAC Applications - Service Water Heating.”

8i. American Society of Plumbing Engineers, Data Book, Chapter 4, “Service Water Heating Systems.”

8j. MIL-STD-1691, "Construction and Material Schedule for Military Medical and Dental Facilities."

8k. American Society of Mechanical Engineers International, ASME Series A112 Plumbing Fixtures and Appurtenances, e.g. “Enameled Cast Iron Plumbing Fixtures”, “Vitreous China Plumbing Fixtures”, and “Porcelain Enameled Formed Steel Plumbing Fixtures”.

8l. International Association of Plumbing and Mechanical Officials, IAMPO Series Z124 Plastic Plumbing Fixtures.

8m. Air Conditioning and Refrigeration Institute, ARI Standard 1010,"Drinking-Fountains and Self-Contained, Mechanically-Refrigerated Drinking-Water Coolers."

8n. American National Standards Institute, ANSI Standard Z358.1.

8o. NFPA 54, “National Fuel Gas Code.”

8p. NFPA 58, "Standard for Storage and Handling of Liquefied Petroleum Gases."

8q. NFPA 59A, “Standard for Liquified Natural Gas (LNG).”

8r. NFPA 99, "Standard for Health Care Facilities."

8s. NFPA 50, "Standard for Bulk Oxygen Systems at Consumer Sites."

8t. Compressed Gas Association, CGA Pamphlet P-2, “Characteristics and Safe Handling of Medical Gases.”

8u. Compressed Gas Association, CGA Pamphlet C-9, "Standard Color-Marking of Compressed Gas Cylinders Intended for Medical Use."

8v. Compressed Gas Association, CGA Pamphlet V-5, “Diameter-Index Safety System – Non-Interchangeable Low Pressure Connections for Medical Gas Applications.”

8w. Not used.

8x. American Society of Plumbing Engineers, Data Book 3, Special Plumbing Systems, Chapter 2, “Plumbing Design for Health Care Facilities.”

8y. Occupational Safety and Health Administration of the U.S. Department of Labor, 29 CFR 1910.1047(a), "Ethylene Oxide."

8z. National Institute for Occupational Safety and Health, Current Intelligence Bulletin 52, "Ethylene Oxide Sterilizers in HealthCare Facilities."

8aa. European Norm (EN) 737-1, “Terminal Units for Compressed Medical Gases and Vacuum.”

8bb. EN 737-2; “Anesthetic Gas Scavenging Disposal System.”

8cc. EN 737-3, “Pipelines for Compressed Medical Gases and Vacuum.”

8dd. EN 737-4; “Terminal units for anesthetic gas scavenging systems.”

Annex A. Additional Note - Compressed Air Systems

Mechanical Refrigeration Versus Desiccant Compressed Air Dryers.

There are definite advantages and disadvantages for each dryer technology, and type selection must consider the individual requirements and characteristics of each project. While there seems to be a trend toward greater utilization of desiccant systems, refrigerated dryers continue to represent the bulk of the systems sold. The principle concern with the refrigerated type is the presence in the air of excessive moisture. However, research does not clearly establish that high moisture levels are a pervasive or unavoidable problem in U.S. military MTF's. There are also concerns in our community with desiccant systems, including excessive air dryness and higher first cost. The concerns with each system are described below:

Refrigerated Dryers.

Advantages:
a. Typically lower cost.
b. Lower space requirements.
c. Presence of higher moisture level in air (higher dewpoint) is better for some procedures.
d. Lower compressor capacity required than desiccant systems.

Disadvantages:
a. Limited minimum dewpoint level of 35-39 ^{o}F; higher dewpoint means greater potential for system condensation.
b. Moisture carryover potential due to evaporator icing, or failure of automatic receiver drainage equipment. (May be correctable by cycling controls and proper specification of components.)
c. Requires regular maintenance.

Desiccant Dryers.

Advantages:
a. Drier air (as low as –40°F dewpoint) leads to lower probability of condensate formation or carry-over in the supply system.
b. Relatively lower maintenance required.

Disadvantages:
a. Very low dewpoint can cause problems with some dental procedures (upward adjustment available in some capacity ranges from some manufacturers but required competitive procurement eliminates ability to specify).
b. Larger compressor capacity required than refrigerated system (to supply additional air for desiccant regeneration).
c. Higher cost.

SECTION 9

ELECTRICAL

9-1 **GENERAL**. This section provides Department of Defense (DOD) policy and guidance for planning, designing and construction of electrical power and illumination systems for Military Medical and Dental Treatment Facilities (MTF's). The words "WILL" and "SHALL" identify mandatory policy and requirements, where the words "Should" or "May" identify guidance.

9-1.1 **Criteria**.

9-1.1.1 Scope. The latest version of the general electrical and illuminating criteria and standards are referenced at "Applicable References, TABLE 9-1." Special DOD electrical criteria, standards and policy for medical facilities are covered in this chapter. Where criteria and standards for general and specific conditions and problems are not covered, acceptable industrial standards shall be followed.

9-1.1.2 Power Supply Criteria Factors**.** Military facilities are generally classified as mission essential or mission support. The designer will verify with the Design Agent the facility classification and design requirements to achieve the necessary degree of reliability, durability, maintainability, efficiency, and economy as appropriate for the types of facilities delineated in MIL-HDBK-1190 before commencing design.

a. **Reliability**. Mission classification and requirements covered in the Department of Defense (DD) Form 1391, and Mil-HDBK-1190 will be used to establish the design reliability requirements. An alternative comparison assessment will be developed to evaluate the reliability choices. Alternative power systems may be authorized, but are limited to serving certain essential loads for mission critical, hospital, and other special facilities and loads as identified therein. The designer shall consider the location and space for essential electrical system components in order to limit interruptions caused by localized natural conditions, such as floods and earthquakes. Essential systems will be designed to function after seismic events occur. Non-essential systems may be inoperable, but components will be constrained to avoid personnel injury, or damage to other building components.

b. **Durability**. Installed electrical systems and electrical equipment will have a minimum rating for continuous full design load, except where other criteria mandate greater, to meet the reliability requirements for the design life of the facility. Mil-HDBK-1190*,* paragraph "Construction Level and Building Types," identifies the design life for facilities.

c. **Maintainability**. The design and construction for facilities will provide a means to remove and maintain equipment, and field installed wiring without interruption to mission critical loads.

d. **Efficiency**. The efficiency of the facility electrical system, measured at the utilization transformer secondary and the alternative power source,

will have a power factor (PF) not less than 0.90 at nominal voltage for balanced three phase loading (phase unbalance will not exceed 5 percent between A, B, and C phase). Where required power factor correction shall be used to assure a minimum PF of 0.90.

e. **Economy**. Evaluate alternative system configurations, and component types and sizing for economic value, consistent with other criteria factors above, and as noted in MIL-HDBK-1190.

9.1.1.3 Criteria for Design in the Federal Republic of Germany (FRG**)**. The electrical design shall be in accordance with DIN VDE Standards 0100, 0298, and 4102, modified to meet the additional safety requirements described herein.

a. The normal and alternate (essential) power system configuration and protocol shall comply with paragraphs 9-2 and 9-3 covered herein, and those requirements mandated by the National Fire Protection Association (NFPA) standards 70, 99 and 110 for the appropriate medical facility type. The normal and alternate *(essential)* power system shall be separate and independent (separate derived source) with single-point grounding that incorporates an uninterruptible power supply (UPS) to bridge the 10 second delay between loss of normal power and restoration of essential functions by the alternate power source for operating rooms, recovery rooms, and other critical areas.

b. Automatic transfer switches (ATS)s with bypass/isolation switches (BP/IS) shall be of the double throw, four pole, draw-out construction complying with paragraph 9-3 and with the requirements of NFPA 70 and 99.

c. Mechanical protection of the normal and essential system power cables shall be achieved with metallic cable tray, fully enclosed for the essential system cables. Critical power branches of the emergency power system, Critical -1, Critical -2, and Life Safety, may be installed in the same cable tray if separated by full height, continuous metallic barriers; the essential system Equipment branch may be installed in the same cable tray as normal power cables if similarly separated by a full height, continuous metal barrier. When sufficient distribution space is available, complete separation of each branch of the essential power system in separate cable trays is required to minimize the chance of intermingling of cables. All cable trays shall be bonded to ground and each section continuously bonded to the next.

d. Essential branch cable shall be 30, 60 or 90 minute fire rated type NHXCH, including an insulated, properly color-coded grounding conductor, and a concentric, copper conducting shield to be utilized as a second (redundant) grounding conductor.

e. Normal power cables shall be type NYCY cable, including an insulated, properly color-coded grounding conductor and a concentric, copper conducting shield to be utilized as a second (redundant) grounding conductor.

f. Circuit grounding conductors shall be so installed that removal of a receptacle or other device will not interrupt the return ground path, in accordance with NFPA 70 and 99.

g. Circuit protection against electromagnetic interference (EMI) and radio frequency interference (RFI) shall be achieved by the use of cable shielding, and compliance with DIN VDE minimum separation distances to medical equipment.

9-1.2 **Definitions**.

9-1.2.1 NFPA-99 and 70 discuss various minimum safe practices, and safety requirements for "General Care", "Critical Care" and "Wet Locations." Tricare Management Activity (TMA) has identified the following patient care areas for hospitals as "Critical Care Areas" where patients may be subjected to invasive procedures and connected to line-operated electromedical devices:

a. Operating rooms.

b. Delivery rooms and Labor and delivery rooms.

c. Cystoscope rooms.

d. Oral Surgery Maxillofacial surgery, Perodontics, and Endodontics.

e. Recovery (surgery, and labor recovery beds).

f. Coronary care units (patient bedrooms).

g. Intensive care unit (patient bedrooms).

h. Emergency care units (treatment/trauma/urgent care rooms and cubicals).

i. Labor rooms (including stress test and preparation).

j. Intensive care <u>and isolation care</u> nursery.

k. Cardiac catherization.

l. Angiographic exposure room.

m. Hemodialysis (patient station).

n. Surgery suite preparation and hold.

o. Hyperbaric chamber.

p. Hypobaric chamber.

q. Radiation Therapy (including simulator room).

r. Nuclear medicine (camera room).

9-1.2.2 All other patient care areas will be treated as "General Care."

9-1.2.3 Wet Procedure Locations. The area in a patient care location where a procedure is performed that is normally subjected to wet conditions from the procedure while the patient is present, that includes standing fluids on the floor and/or drenching

the work area, either of which condition is intimate to the patient and/or staff. These areas will conform to the requirements NFPA-99, Paragraph 4.3.2.2.8 “Wet Locations” and NFPA-70, Paragraph 517.20, “Wet Locations”.

9-1.2.4 Wet Locations. Those patient care areas that are normally subject to wet conditions [see paragraph 9-3.13, “GROUND-FAULT CIRCUIT-INTERRUPTERS (GFCI)”] including standing water on the floor, or routine dousing or drenching of work areas and those areas defined in NFPA-99 and 70. Routine housekeeping procedures and incidental spillage of liquids are not defined as wet locations. Operating rooms, delivery rooms, and other similar areas/locations may be a “Wet Procedure Location” as defined by 9-1.2.3.

9-2 EXTERIOR ELECTRICAL.

9-2.1 Exterior electrical systems shall conform to ANSI-C2, "National Electrical Safety Code," except where Service technical criteria have more stringent requirements.

9-2.1.1 Common Voltages. 4.16kv, 12.47kv, 13.2kv, 13.8kv and 34.5kv are common distribution voltages for military installations. However, 12.47kv, 13.2kv, and 13.8kv are the normal distribution voltages serving medical facilities.

9-2.2 **Normal Source Site Investigation**. Site electrical evaluation shall meet the requirements of Section 2, “DESIGN PROCEDURES, SUBMITTALS, AND DOCUMENTATION.” Coordinate electrical utility siting with other utilities. Provide underground distribution on site, and visual screening by location or landscaping elements, where appropriate for the project, to improve overall site aesthetics.

9-2.3 **Normal Hospital Source**. For electrical design criteria related to power supply, see documents listed in “TABLE 9-1 APPLICABLE REFERENCES." Hospitals will be served by two primary service feeders each serving one end of a double-ended substation or to a selector switch serving a multi-ended network substation (See ANNEX B for additional criteria requirements related to the multi-ended network substation). Each feeder shall be able to carry the full hospital demand plus 20 percent spare load growth, and shall be installed in an underground concrete encased ductbank within the hospital site. Dual primary feeders serving both ends of a double-ended substation, through a primary selector switch, as illustrated in Figure 9-1 of UFC 4-510-01 must have prior approval of the design agency before incorporation into a design. Service feeders will be connected to different power sources, if available, and to two differently routed distribution system feeders. Where two power sources are not available, the service feeders may be connected to two different sections of a true loop system (A true loop system configuration is where both ends of a utility primary feeder originates from different substations or switching stations, or different breakers and transformers in the same substation and has the capacity to serve the total loop load from either end.). Manually operated primary selector switch and fused load break disconnect switch will be provided for each transformer as indicated in Figure 9-1. Transformers will normally be located outside the hospital, but may be located within the building where practicable and economical. Double-ended unit substation distribution systems will be designed for hospitals, medical centers and specially designated facilities. The double-ended substation configuration shall be arranged for easy

expansion from each end. Each transformer in the double-ended unit substation will be sized to serve approximately 60-70 percent of the substation demand load (linear and nonlinear) before forced air cooling is initiated and 100% of demand load with forced air cooling initiated and will be impedance matched. All double-ended unit substations will have coordinated surge and fault protection. System protection will be selective. The normal power system main equipment shall not be located below finish grade level.

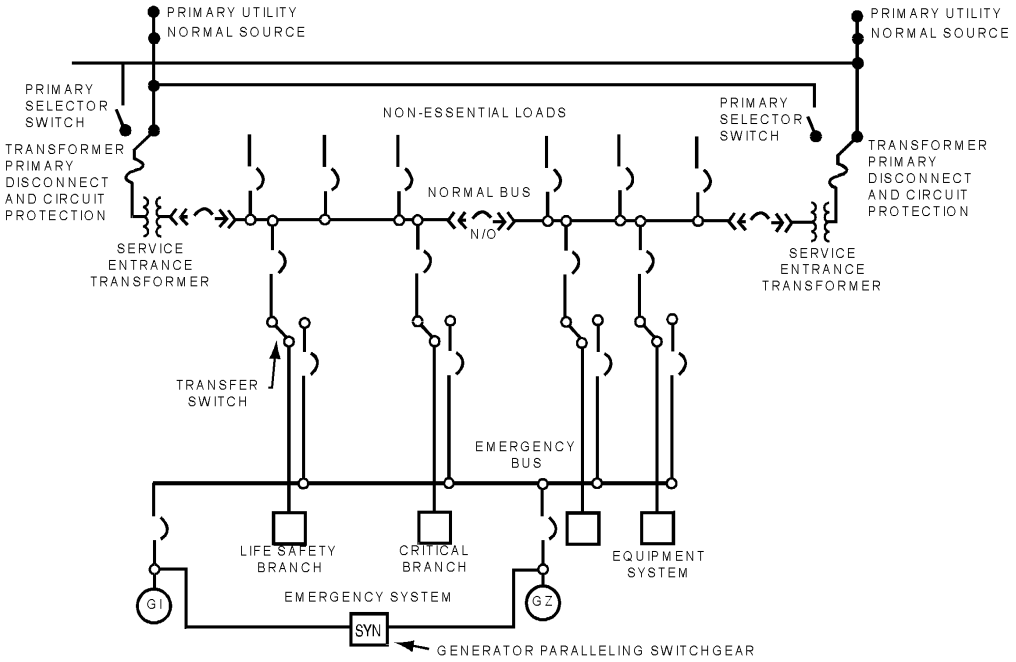

FIGURE 9-1 Hospital Oneline Diagram

9-2.4 **Normal Ambulatory and Clinic Source**. All other health care facilities will be served by a single-ended substation distribution system with coordinated surge and fault protection. The primary service feeder will be designed to carry full demand plus 20 percent spare load growth capacity.

9-2.5 **Transient Protection**. Systems that incorporate solid-state devices are susceptible to electrical system transients that can cause system malfunction or equipment component damage. Unless specifically required for specific items of equipment by the using Military Department and/or by an A&E (designer) evaluation of solid-state requirements for intensive care areas and approved for installation by TMA/PPMD power conditioning equipment will normally not be installed as part of the building electrical system at the utilization point. Contractor-furnished, contractor-installed systems that utilize solid state devices will be provided with transient protection. Static Uninterruptible Power System (UPS) will normally be provided with the equipment and system being served. However, requirement or provisions for UPS will be determined on a project-by-project basis. Provisions for future installed power conditioning equipment will be determined on a project-by-project basis.

9-2.6 **Grounding**. System ground shall be adequate for safety and for reliable operation of sensitive Users' and facility equipment. Typical communications system

equipment used in hospitals requires five ohm system ground for proper operation. All grounding systems will be bonded together as required by NFPA 70. See paragraph 9-4.8, “PATIENT CARE AREA GROUNDING for further requirements.”

9-3 **ALTERNATE POWER SOURCE**.

9-3.1 **Alternate Electrical Source**. The alternate electrical source will conform to NFPA-70 and 99 except where Service criteria listed in “TABLE 9-1" have more APPLICABLE REFERENCES_stringent requirements. Additional load capacity may be provided those hospitals assigned mobilization or mass casualty response missions, or located in an area where extended power outages are frequent. The emergency power source will be designed as a separately derived power source. True RMS metering will be provided for load monitoring.

9-3.2 **Ambulatory Care Centers and Clinics**. An alternate power source shall be provided if required by NFPA-99 [TABLE 9-1 APPLICABLE REFERENCES] If an on-site generator set is not required by NFPA-99 and 70, approval by TMA/PPMD for a generator must be justified by the using Military Department. The justification will address mission contingency requirements, local power requirements, and safety for human life.

9-3.3 **Medical and Dental Clinic**. Where any concentration of inhalation anesthetic or intravenous sedation is used or any electrical life support or resuscitative equipment is used in medical or dental clinics, *an* alternate source of power is required in accordance with NFPA-70, and NFPA-99. The alternate source of power will be either a generator, battery system, or self-contained battery internal with the equipment and will have the capacity to sustain its full connected load at rated voltage for a minimum of 1 and 1/2 hours. The system will be so arranged that the alternate source of power shall be automatically connected to the load within 10 seconds. The essential electrical system will supply power for task illumination related to life safety which is necessary for *safe* cessation of procedures and all related anesthesia and resuscitation equipment.

9-3.4 **Hospitals**. The alternate power source will consist of two or more engine generator sets designed to provide electrical power for hospital essential electrical systems, plus 20 percent future load growth at 100% demand (Fig 9-1) during the interruption of the normal power supply, as required by NFPA 70 and NFPA 99. Where the essential electrical system load is less than 150KVA, one generator may be considered. The experience level of available maintenance, availability of parts, and factory service will be factored into CONUS and OCONUS designs. The generator sets will be of equal capacity and ratings with matched impedance and loss characteristics and designed to carry, in parallel or through priority transfer equipment, the maximum demand load (linear and nonlinear) of the essential electrical system. Motor starting and X-ray unit momentary kva loads will be evaluated when sizing engine generator sets. Parallel operations of the generator sets will be as indicated by Fig 9-1. Automatic load shedding with manual override controls and load shifting capacity will be incorporated in-the-event that one generator fails. Each generator will have the capacity to handle the life safety and critical care demand loads [Hospitals built under the 1971 version of the National Electrical Code (NFPA-70) may have a life support branch that is the second critical branch supplied by a separate automatic transfer switch (ATS).].

9-3.5 **Engine Generator Sets**. Engine generator sets for hospitals (MEDICAL FACILITIES) will be powered by diesel fuel and conform to Table 9-2, "Diesel Electric Generator Sets for Medical Facilities (for 60-Hz power)." The preferred generating voltage is the highest utilization voltage proposed for the facility. Normally 480Y/277 volt, 3-phase, 4-wire system is the highest utilization voltage. Higher voltages may be generated where line losses would otherwise be excessive. The sets will include automatic start-and-stop equipment, solid state battery chargers, fuel storage tanks, audible and visual warning device to alert of less than 4 hours fuel supply, and day tanks and radiators as required. The engine will have a residential type exhaust silencer and will be able to start and assume its full electrical loads within 10 seconds from the interruption of the normal electrical power source. Generator controls will include reverse power relays to prevent generator damage from commercial or on site generators per NFPA-110. If computers are to be operated directly from the emergency generator (not through a UPS or uninterrupted power supply), an isochronous governor is required.

Table 9-2. Continuous and Emergency Rated Diesel-Electric Generator Sets for Medical Facilities

DEFINITIONS:

1. Prime Power Class engines are for use with diesel-electric generator sets expected to provide power on a continuous basis (i.e., in excess of 4,000 hours annually or in excess of 40,000 hours during the initial 10 years of operation) to serve as the sole or primary source of power.

2. Standby Power Class engines are for use with diesel-electric generator sets expected to provide power on a standby basis for a significant number of hours each year (i.e., between 1,000 and 4,000 hours annually or between 10,000 and 40,000 hours during the initial 10 years of operation).

3. Emergency Power Class engines are for use with diesel-electric generator sets expected to provide power on an emergency basis for a short period of time (i.e., less than 1,000 hours annually or less than 10,000 hours during the initial 10 years of operation).

DESIGN APPLICATION:

1. For 50-Hz power the indicated speed limits should be reduced to the nearest synchronous speed for that frequency.

2. Hospital diesel-electric generator sets are normally EMERGENCY POWER CLASS.

3. Hospital diesel-electric generator sets used for co-generation will be Class "PRIME POWER" or "STANDBY POWER".

4. Design and Construction Cost for Co-generation. The cost differential between medical emergency power and co-generation capacity will not be funded with medical project funds.

9-3.6 **Location of Engine-Generator Sets**. Generator sets normally will be located in the central energy plant serving the hospital, provided that the plant is located sufficiently close to the structure to minimize line losses and prevent excessive cable runs. When the central energy plant is remote from the hospital structure, generators will be installed in a generator building located adjacent to the structure or within the structure at ground level (along the exterior wall) whichever is more economical. The generator and emergency switch gear rooms will be located at or near the building exterior to facilitate initial installation and removal and replacement of defective equipment and will be provided with 1 and 1/2 hours battery back-up for general illumination. The generator sets and auxiliaries will be arranged and located so minimum facility modifications will be required for future installation or replacement of an additional generator set and auxiliaries. Service entrance transformers *and* other equipment not supporting the essential electrical system will not be installed in the same area (room) as the engine-generator sets. Provide view window in or adjacent to the entrance door. The alternate power system main equipment shall not be located below finish grade level.

9-3.7 **Engine Starting**. Electric start will be provided on engine-generator sets rated below 700Kw and either electric or pneumatic start will be provided on engine - generator sets rated 700Kw through 1000Kw. For all engine-generator units rated above 1000Kw, only pneumatic start will be provided. Reference NFPA-99, and 110.

9-3.8 **Manual Test Switches**. Manual test switches will be provided for each automatic transfer switch of the essential electrical system. A group of test switches will be provided at a single point in the generator control area and one test switch will be provided with each automatic transfer switch. The two test switches associated with each transfer switch will be wired in series to allow testing at either location. Testing of either individual automatic transfer switches or the entire essential electrical system will be possible. Each test switch will simulate a normal power source failure and automatically cause the engine generator sets to crank, attain rated frequency and voltage, and to transfer associated essential electrical system loads from the normal source to the emergency source. After 30 minutes of operation in the emergency mode, essential electrical system loads being tested will again be automatically transferred back to the normal source. If for any reason the generator units experience difficulty while in the emergency mode, the load will immediately be transferred to the normal source automatically. During this test run, nonessential hospital loads will continue to be served from normal power supply without experiencing interruption. A manual override switch will be installed that can be actuated to keep essential hospital loads on the emergency source as long as desired. This switch will permit engine generator sets to operate indefinitely beyond the 30 minute automatic transfer restoration time.

9-3.9 **Generator Set Operation**. Generator sets will be designed to function essentially as follows: After 30 hertz (CYCLES) following an interruption of the normal power supply, each generator set will receive the starting signal simultaneously, whereupon each set will automatically crank and attain normal speed and voltage. Voltage for sensing devices to start generator sets will be taken from each phase of the incoming normal power terminal of each automatic transfer switch. The first generator sets to reach preset voltage and frequency conditions will be automatically connected to the emergency bus. System protection will be provided to prevent simultaneous

connection of non-synchronized generators to the dead emergency bus. A priority selective device will be provided and programmed or preset to transfer the emergency system loads (life safety and 2 or more critical branches supported from separate ATSs) from the normal bus to the emergency bus within 10 seconds from time of NORMAL POWER interruption. The remaining unit will automatically synchronize with the emergency bus, close the respective generator breaker, and connect the units in parallel for normal operation. After this, the equipment system loads will be automatically transferred to the emergency bus by programmed or preset incremental steps. The equipment system loads will be completely transferred within 45 seconds, based on a priority sequence, after the generator sets are connected in parallel. Should one or more of the generator sets fail to crank or is shutdown for any reason during the operation, the remaining unit will be scheduled to serve only emergency system loads and, if possible, highest priority equipment system loads until the failed unit is energized and connected to the emergency bus. For such a condition, a programming device will shed all or part of the equipment loads, to keep the remaining generator within its kw rating. If the automatic controls fail, a manual start switch will be provided to override the automatic start of the engine-generator sets so they can be cranked, synchronized and connected on the emergency bus.

9-3.10 **Return to Normal Power Source**. Thirty minutes following the return of a stable normal power supply, both emergency system loads and equipment system loads will be automatically transferred to the normal power source. An automatic timer, having an adjustable time range of from 2 to 30 minutes (set at 30 minutes), will be provided to this transfer. Following transfer of the loads, generator sets will continue to run, unloaded, for a period of 15 minutes before shutdown, after which the controls will automatically reset for a new cycle. A manual start switch will override the automatic start of engine generator sets so they can be manually cranked, synchronized, and connected to the emergency bus, if automatic controls fail. Additional manual controls will be provided as indicated elsewhere in this section.

9-3.11 **Automatic Transfer Switches (ATS)**. All ATSs will be double-throw with draw-out construction. Contacts will have viewing ports for ease of contact inspection. ATSs shall have been UL tested with the main up-stream breaker to assure coordinated withstand compatibility between the ATS and the interruption time of the breakers. Circuit breaker type transfer switches are not acceptable. Each ATS will have indicator lights to identify Normal Power (green in color) and Emergency Power (red in color). All ATSs will be equipped with a load break by-pass isolation switch (The by-pass isolation switch can be initiated with not more than two movements of the hand to either position regardless of the position or condition of the ATS.) to maintain normal or emergency power while the ATS is being repaired or maintained. Load bypass to the ATS's connected source will be achieved with either no load interruption, or a load interruption of not more than 10 (CYCLES) hertz. ATSs feeding high efficiency motors rated 25 horsepower or larger will be provided with an in-phase monitor to prevent an out-of-phase transfer. The in-phase transfer will be achieved without control of the frequency of either power source to prevent excessive motor in-rush current. Use of closed-transition switching for facilitating essential system testing requires special justification and approval. The by-pass isolation switch for the ATSs serving nonessential equipment can be optional.

9-3.11.1 ATS and Bypass/Isolation Switch Location. For new inpatient facilities, the ATS and BP/IS equipment shall be in a separate CMU 2-hour fire rated room with direct access from the normal main power equipment room and the alternate power source equipment room.

9-3.12 **ATS and Bypass/Isolation Switch (BP/IS) Testing**. Laboratory testing will be conducted on the ATS and BP/IS to be supplied for this facility, or shall have been completed on a previous, randomly selected standard production ATS and BP/IS unit having the same model and capacity as the ATS and BP/IS specified. The overload, endurance, and temperature tests shall be conducted in the following specified sequence:

a. General.
b. Normal Operation.
c. Overvoltage.
d. Undervoltage.
e. Overload.
f. Endurance.
g. Temperature Rise.
h. Dielectric Voltage - Withstand.
i. Contact Opening.
j. Dielectric Voltage-Withstand (Repeated).
k. Withstand.
l. Instrumentation and Calibration of High Capacity Circuits.
m. Closing.
n. Dielectric Voltage - Withstand (Repeated).
o. Strength of Insulating Base and Support.

No deviation from the test sequence will be granted. Approval will not be granted to deviate from the overload, endurance and temperature test sequence.

9-3.13 **Ground Fault Protection Equipment**. The essential electrical system will not be provided with ground fault protection devices. The generator circuit breaker and essential electrical main distribution board circuit breaker will be provided with ground fault detection features, when required, to indicate a ground fault and sound an audible alarm but not trip the breaker (See paragraph 9-3.1, "ALTERNATE ELECTRICAL SOURCE"). Each ground fault alarm sensor level will be activated when the ground fault current is 10% of the breaker rating but not less than 50 amps.

9-3.14 **Remote Alarm Annunciator**. A remote alarm annunciator, storage battery powered, will be provided in a location readily observed by operating personnel at a regular work-station. The annunciator will indicate alarm conditions of the alternate power source as indicated in NFPA-99 and 110, and will include as a minimum the

following: battery and battery charger malfunction, engine generator run status, engine generator alarms, and less than 3 hours fuel supply in the day tank and 24 hours supply in the main storage tank. A separate audible and visible derangement signal will be provided within the hospital at a location that is continuously monitored. Location will be as indicated in Section 10, “COMMUNICATIONS, INFORMATION SYSTEMS, and SIGNAL SYSTEMS.” This derangement signal will be appropriately labeled but need not display individual alarm conditions.

9-3.15 **Fuel Storage Tanks**. The fuel storage tanks and installations in Hospitals will comply with NFPA-30, "Flammable and Combustible Liquids Codes," and Local, State, and Federal Environmental Protection Agency requirements. The capacity of the fuel oil tank will be sized to the nearest standard size for a fuel storage use capacity of normal usage shall be a 4-day supply at full load. In remote OCONUS locations a 7-day fuel supply (at full load) shall be provided. A 14-day fuel supply shall be required for prime power projects. If underground fuel storage tanks are required, they shall be double wall with leak detection in accordance with the Environmental Protection Agency (EPA) standards. Separate day tanks, with an overflow back to the main storage tank, will be provided for each engine generator set and will be sized (not less than 4 hours operation at full load) as follows:

50 kW to 100 kW generator: 25 gallon min. - 50 gallon max.
101 kW to 200 kW generator: 50 gallon min. - 75 gallon max.
201 kW to 300 kW generator: 75 gallon min. - 100 gallon max.
Over 300 kW generator : 100 gallon min. - 250 gallon max.

A set of duplex transfer pumps will be provided for each fuel storage tank. Each fuel transfer pump will be sized to accommodate all generators including future set. All electric fuel tank and related fuel transfer pumps shall have power available at all times [Where two critical branch automatic transfer switches (ATS) are available, each of the duplex fuel transfer pumps shall be connected to different critical branch ATSs.]. Provide fuel filtering equipment as recommended for the generators and the local site conditions. Natural gas or comparable gas fuel will not be used as an operating fuel for hospital emergency power generation.

WARNING: Number 2-diesel fuel can be used in lieu of Number 2-heating fuel. However, number 2-heating fuel can not be used in emergencies as a substitute for number 2-diesel unless the flash point is 125°F, cetane number is 40 and the average Btu/gal is 141,800 (See ASTM D975 for more details).

9-3.16 **Loads on the Alternate Source**. The alternate power source will have sufficient capacity to supply the essential electrical system of the hospital as outlined in NFPA-70, as modified herein, and as required by items listed in Appendix A of UFC 4-510-01. Avoid oversizing of generator sets such that load banks are needed for testing under load as required by accreditation authorities. Note that operating generators at low loads leads to fouled combustion, and unreliable performance. The essential electrical system consists of two parts: the emergency system and the equipment system. The emergency system will consist of two branches: the life safety branch and critical care branch. The life safety branch shall have no loads connected to it other than those loads identified in NFPA-70 and 99. The failure of a critical branch component between the area and the transfer switch could render the entire section without power.

Supplying a mixture of normal, critical, and even equipment branch power to critical areas is more reliable and is recommended in NFPA-99. The essential equipment system will serve all essential equipment listed in NFPA-70 and 99. Additional loads may be added to the critical branch or equipment system by the using Military Department as needed if it improves hospital operations. The power and lighting loads for the following areas will be connected to the critical branch:

a. Operating rooms.
b. Delivery rooms, and Labor and delivery rooms.
c. Cystoscopy rooms.
d. Oral Surgery, Maxillofacial surgery, Perodontics, and Endodontics.
e. Recovery (surgery, and labor recovery beds).
f. Coronary care units (patient bedrooms).
g. Intensive care unit (patient bedrooms).
h. Emergency care units (treatment/trauma rooms and cubicals).
i. Labor rooms (including stress test and preparation).
j. Intensive care nursery.
k. Cardiac catherization.
l. Angiographic exposure room.
m. Hemodialysis (patient station).
n. Surgery suite preparation and hold.
o. Hyperbaric chamber.
p. Hypobaric chamber.
q. Special procedure room(s).
r. Pharmacy dispensing.
s. Radiation Therapy (including simulator room).
t. Nuclear medicine (camera room).

9-3.17 **Essential Loads**. Essential loads are divided into three categories: Life safety, Critical Care and Equipment. These loads receive both normal and emergency power. However, dual sources of critical power (originating from separate critical branch ATSs) are required in some areas (see Appendix "A" of UFC 4-510-01 and Service Medical Guide plates as applicable). This information can be found in the Medical Guide Plates, when issued for use. The following information derives from the current editions of NFPA-99 and NFPA-70; Designer’s shall refer to the latest editions of these standards as they become available, and shall coordinate with TABLE 9-1 in Section 9 of this document for other special communication power requirements.

9-3.17.1 Life Safety Branch Loads. The life safety branch provides emergency power to ensure patient and personnel safety during the interruption of normal power

source. The following lighting, receptacle and equipment limitations are as defined by NFPA-70 and 99:

a. Egress illumination includes 25% of corridor and 50% of stairway illumination, plus 25% of assembly areas such as dining rooms, chapels and auditoriums.

b. Exit signs shall be selected to provide visibility in smoke conditions

c. Fire alarm and piped medical gas alarm systems, including smoke alarms, medical vacuum system alarms and alarms for ventilation for smoke evacuation for those areas where patient evacuation is not feasible.

d. Emergency communications to be used to notify the general population (radio paging and intercom systems), including telephone system, power and lighting for communication closets and crisis control centers, and associated equipment. Various related systems are included as directed.

e. Selected power, task lighting and receptacles at generator set locations; in transformer, switchboard, mechanical and electrical equipment rooms; repair shops and other equipment rooms; and charger for battery powered emergency light sets.

f. Elevator cab lighting, control, communication and signal systems.

9-3.17.2 Critical Branch Loads. The critical branch of the Emergency system alternate power will supply task illumination, fixed equipment, selected receptacles and special power circuits serving areas and functions related to inpatient care during the interruption of normal power. The following are in agreement with NFPA-70 and NFPA-99:

a. Nurse call, telephone equipment and selected computer equipment and selected data outlets.

b. Oxygen and medical gases equipment, medical surgical vacuum pumps, and medical surgical compressed air system.

c. In patient rooms (on inpatient nursing units), one duplex receptacle will be provided per bed including mobilization beds located in the patient service console. Two additional wall-mounted duplex receptacles will be provided in single bedrooms and pediatric bedrooms.

d. All receptacles in patient service consoles, isolation nursing rooms, cystoscopy, IVP rooms, cardiac catheterization room, radiographic special procedure rooms, oral surgery room, and recovery rooms. Provide additional normal powered receptacles for backup of critical circuits.

e. All receptacles in selected rooms in the surgery suite, the delivery suite, nursery, coronary care unit, intensive care units, hemodialysis, and emergency.

f. All equipment for the refrigerated storage of blood, biological, pathology specimens and medicines.

g. Two X-ray rooms (including one fluoroscopic room) and required automatic x-ray film processor station.

h. Dental oral evacuation system and dental compressed air system.

i. Laboratories, incubators, analysis, blood bank, bone and tissue banks, chemistry, hematology plus selected receptacles.

j. One flash sterilizer in each surgical suite and delivery suit cluster core.

k. Selected receptacles in admitting and disposition, pharmacy, treatment rooms, nurse stations, and oral surgery rooms, Maxillofacial surgery, Perodontics, and Endodontics clinic treatment areas with central piped medical gas outlets.

l. Medical preparation stations and nourishment stations.

m. Fuel transfer pump, battery charger, jacket water heaters, alarms, controls, air compressors for pneumatic start and other similar generator systems accessories essential for generator operation.

9-3.17.3 Equipment System Loads. Equipment system feeders and branch circuits connected to the emergency/alternate power source will supply loads automatically in a delayed selective order through automatic transfer switches. The following equipment list derives from the current editions of NFPA-99 and 70; Designers shall refer to the latest editions as they become available.

a. One passenger type and one hospital service elevator per hospital wing (or section if applicable) to operate on a selective basis.

b. Fire pumps and controls will be the first to connect and the last piece of equipment to be shed. The load for fire pumps will be based on the lock rotor current of the motor plus the controls.

c. Refrigeration, food service and morgue refrigeration.

d. Essential power for auxiliaries and controls to provide safe operation of the heating plant.

e. Medical vacuum, waste anesthesia evacuation, and medical air system; dental vacuum and dental air systems emergency power support shall be determined upon a project by project basis in coordination with Using Service requirements and other provisions of this Section.

f. HVAC systems, including cooling *and heating* capacity for all critical care spaces, and heating of patient bedrooms

g. Domestic water, sump and sewage equipment needed to continue hospital operations.

h. Special purpose exhaust systems, hoods in laboratories, including radioisotope hoods, and isolation room exhaust fans.

i. The pneumatic tube system.

j. Helipad lighting and visual navigational aids.

If night operations are required, 10 minutes of battery backup will be provided to obtain no break system and will be connected as a priority-2 load ~~(~~Where helipad operations are essential, provide a priority 1 equipment connection.~~)~~.

9-3.18 **Alternate Source Testing**. Alternate power source essential electrical systems shall be tested before final acceptance, for proper operation, as required by NFPA 99 and 110. All connected loads will be made operational, and will be operating within normal demand load tolerances. Alternate power systems will be designed to facilitate periodic system-wide and component test and inspection.

9-4 **INTERIOR ELECTRICAL SYSTEMS**. Interior electrical systems shall conform to NFPA codes except where military departmental criteria are more stringent.

9-4.1 **Utilization Voltage**. 480Y/277V, 460V, 208Y/120V, 240V and 120V low voltages and 4.16kV and 6.9kV medium voltages are common utilization voltages found at military installations. However, 480Y/277 volt and 208Y/120 volt are the standard utilization voltages for new and existing medical facilities.

9-4.1.1 Interior Distribution. Interior lighting and power loads will be served at the highest voltage practicable. Fluorescent and high intensity discharge (HID) lighting systems and building power loads will be supplied by a 480Y/277 volt system. Dry-type transformers will be utilized to furnish 208Y/120 volt power for incandescent lighting, receptacle, and small equipment loads. These transformers will be "K" factor rated if required for specific non-linear loads (See sample analysis matrix Table 9-4). Where transformer type voltage regulators are used to maintain nominal voltage within plus or minus 5%; an automatic step or induction transformer regulator shall be used which have adjustable high and low voltage limit controls and a voltage meter. A 208Y/120 volt system will be provided where the use of higher voltage is not cost effective. Main distribution switchgear and switchboards will be the draw-out, solid state, adjustable trip circuit breaker. Panelboards for branch circuits will be of the circuit breaker type. Ground fault protection will be provided in accordance with NFPA-70 and 99. All protective devices will be coordinated for selective overload, short-circuit, and ground fault protection. Ground fault protection of the essential electrical system will be as required above.

9-4.1.2 Coordination and Short-Circuit System Analysis. Short-circuit and protective devices coordination studies will be in accordance with UFC 3-520-01. Additionally, a coordinated protective devices setting will be provided by the designer. Selection of protective devices and switchgear for a new electrical system shall be based on a short-circuit protective device coordination analysis. For additions or modifications to existing system, the analysis shall include all of the protective devices affected in the existing system. All protective devices shall be properly coordinated to provide selective tripping. No, series rated protective equipment and/or devices will be allowed! Surge protection should also be incorporated in the coordination analysis.

9-4.1.3 Location and Space Requirements. Electrical equipment rooms will be located at or near the building exterior to facilitate initial installation of large equipment, and removal and replacement of defective equipment. Adequate space will be provided for maintenance of electrical equipment and equipment removal. Pipes and other equipment foreign to the electrical equipment will not be located in, enter, or pass through such spaces or rooms. Where practicable in finished areas of hospitals, panelboards, signal and communication cabinets will be grouped, surface-mounted, in separate electrical and communication ventilated wiring closets. Joint use closets are not acceptable and will not be provided. Closets in which dry-type transformers and automatic transformer type regulators are installed, should be located away from noise sensitive areas and provided with adequate ventilation to maintain an ambient temperature not to exceed 86 degrees F. For hospitals with more than one floor, electrical and communication closets should be stacked vertically whenever practicable. Panelboards in critical care areas will be located in the vicinity of their loads, and will be accessible to the operating staff only. Such panelboards will not be located in the patient bedrooms.

9-4.1.4 Electrical Rooms. A minimum of one branch circuit electrical room shall be provided for each smoke zone of a hospital building space, and each 2090 square meter (22,500 square feet) of other medical facilities building space. The footprint for each piece of equipment with working space, and NFPA-70 clearance requirements shall be shown. No branch circuit electrical room will feed loads beyond the smoke zone in which it is located. The branch circuit electrical rooms will be accessed off of a primary through corridor, and the entry door or doors will swing 180 degrees as not to impede traffic flow in the corridor or violate clearance requirements of NFPA-70. In multi-story medical facilities, the branch circuit electrical rooms should be stacked. A minimum of 20 percent additional free wall space should be provided to accommodate customer flexibility requirements.

9-4.2 **Conduit, Cable Tray and Wire**. All wiring will be insulated copper in conduits and installed per NFPA-70 and MIL-HDBK 1190. Metal enclosed feeder, plug-in busways or surface metal raceway may be used. A green insulated copper ground conductor will be run with all branch circuits. Wiring in all patient care areas and the life safety branch and critical branch of the essential electrical system will consist of insulated conductors installed in a separate metallic raceway. Where cable trays are used the normal and essential power system conductors will be in separate full height compartmented, and electrically continuous covered trays. Cable and raceway circuit identification shall be at each end and at all transitions.

9-4.2.1 Conductors installed to furnish emergency power will not be installed in the same raceway with normal power conductors.

9-4.2.2 All normal and emergency power junction boxes, pull boxes and similar parts will be readily accessible. Clearly identified access panels will be installed as necessary for proper maintenance and operation of the electrical distribution system.

9-4.3 **Branch Circuits**. All circuits serving patient care areas shall comply with NFPA-99 and 70 except where reference criteria requires more stringent standards.

9-4.4 **Wet Treatment Areas**. Circuits serving "wet" treatment locations, see subparagraph 9-4.6.9.a, “WET LOCATIONS,” will be furnished with ground fault interrupters. Ground fault interrupters on circuits serving life support equipment will not be installed, as required by NFPA-99 and 70.

9-4.5 **Radiology Provisions**.

9-4.5.1 X-Ray Feeder. Radiographic or fluoroscopic equipment will be supplied by a 3-phase, 5 wire neutral and ground, 480Y/277 volt feeder from the main distribution switchboard to an enclosed circuit breaker disconnect located adjacent to the associated X-ray control room. X-ray loads will not be included in the demand load. Effect of X-ray unit momentary kVA load on transformer voltage regulation will be evaluated. Transformer size will be increased as necessary and feeders sized for satisfactory system performance. Separate service transformers to the X-ray units will not be provided. A door interlock system will be provided to prevent production of X-rays when any X-ray room door is open. Magnetic type door switches, and conduit and wiring from the switches to the control console will be provided. Doors immediately adjacent to the control room may not be required to be part of the interlock system. A single phase 120/208 volt branch circuit panelboard will be provided in each room for X-ray unit peripheral equipment. Additional electrical design requirements are contained in the (Universal) x-ray room criteria portion of the Section Medical and Dental Equipment and Appendix "B”.

9-4.5.2 Mobile X-Ray Unit Outlets. Mobile X-ray equipment in nursing units will normally be battery operated. Duplex receptacles rated 20-ampere, 125-volt for battery recharging will be provided in designated areas. Should battery operated units not be used as determined by the Using Service, each nursing unit corridor will be provided with 60-ampere, 250-volt, 2-pole, 3-wire, single phase, twist lock, grounding type flush mounted receptacle. Mobile X-ray unit loads will not be included in demand load.

9-4.6 **Receptacles**. Receptacles will be provided as follows.

9-4.6.1 General Purpose Receptacles. General purpose multi-outlet branch circuits will be rated 20-amps with convenience straight blade type receptacles rated 20-ampere, 125-volt, 2-pole, 3-wire, grounded type. All other receptacles including those dedicated to medical equipment will not be of less than 20-ampere rating. Receptacles will normally be straight blade type.

Provide a minimum of one general purpose 20-amp, 125 volt duplex receptacle outlet per wall in each room. In rooms where walls exceed 3 meters, provide an additional duplex outlet for each additional 3 meter of wall space fraction there of. Receptacle spacing shall not exceed 3.5 meters. The general purpose receptacles are in addition to the special purpose and dedicated outlets for special equipment. Do not provide receptacles in public toilets, staff toilets outside of the command areas and janitor closets.

9-4.6.2 Hospital Grade Receptacles. Hospital grade receptacles will only be provided where required by NFPA-70 and as defined below. Final design electrical

drawings will indicate "Hospital Grade" (HG) receptacles in the following locations Provide Specifications Grade Heavy Duty receptacles in all other locations:

1. General care patient bed locations.
2. Critical care patient bed locations.
3. Any location where a patient bed or patient care service console is located.
4. Anesthetizing locations:
   - (1) Operating Rooms.
   - (2) Delivery Rooms.
   - (3) Oral surgery.
   - (4) Cystoscopy (in Operating rooms and Clinics).
   - (5) Cardiac Catheterization Lab.
   - (6) Angiography / Special Procedures.
   - (7) CT Scanning Room.
   - (8) MRI Scanning Room.
   - (9) Medical Maintenance.
   - (10) Intensive Care.
   - (11) Emergency Trauma Rooms.
   - (12) Fluoroscopy Rooms.
   - (13) Endoscopy Rooms.
   - (14) Pulmonary / Respiratory Therapy.
   - (15) Nuclear Medicine.

9-4.6.3 Duplex Receptacles. Not less than one duplex receptacle will be provided in each wall of all rooms and interior areas, except closets, scrub rooms, toilets and similar spaces. Electrical closets will be furnished with not less than one duplex receptacle from a dedicated 20 ampere, 125 volt branch circuit. Communication closets will be furnished with 20 ampere, 125 volt duplex receptacles on each wall and power will be supplied by two dedicated 20 ampere branch circuits on the same phase. (Additional communication closet criteria can be found in Section 10.). One duplex receptacle will be provided per every 3 linear feet of casework in nurse's stations, subnurse's stations, reception counters, and control counters. Each administration type desk location will be provided with two duplex receptacles. Each data workstation will be provided with an additional identified duplex outlet. Each data outlet device plate will be marked "data power" with a steel stamp or silk screened 1/4 inch high letters. Circuits for data outlets will be an independent single phase 20 ampere, 125 volt circuit serving not more than four duplex receptacles and having a non-shared neutral. Where a 20 ampere, 125 volt receptacle is incorporated in the same metal box with a television or data outlet, a partitioned metal box with separate power and signal conduits will be

provided as required (Criteria can be found in Section 10, "Communications."). See Guide Plates for requirements in special areas.

9-4.6.4 Safety Receptacles. Hospital Grade tamper resistant receptacles will be provided in all hospital areas occupied by children, including playrooms, baths, toilets, pediatric waiting and pediatric bedrooms. Receptacles in psychiatric seclusion rooms (patient care areas, wards and rooms) will also be of the hospital grade tamper resistant type. The safety receptacles used in these areas will be designed to prevent shock hazards from metallic objects which might be inserted in the receptacle slots.

9-4.6.5 Maintenance Receptacles. Floor maintenance receptacles located in corridors will be flush mounted and will not be of less than 20-ampere rating. Determination of receptacle type, voltage, current rating, and spacing will be coordinated with the Using Service to provide the best utilization of existing floor maintenance equipment. Provide receptacles within 7 meters (25 feet) of all installed equipment which requires maintenance.

9-4.6.6 Back-to-Back Receptacles. Outlets installed back-to-back through walls will be permitted only in rooms or areas where sound control or fire rating integrity is not required.

9-4.6.7 Receptacle Identification. Receptacles connected to the emergency system will be red and may be furnished with either metal or plastic plates. Metal plates will be finished in baked enamel and acrylic plastic plates will be impact resistant with integral color. Each device plate will be marked "EMERGENCY" and will identify the panelboard and circuit number at the top with steel stamped or silk screened letters not less than 1/4 inch high Indentation of the steel stamp will be filled with black enamel or acrylic paint. Silk screened letters will also be of black enamel or acrylic paint. Pressure sensitive tapes with markings are not acceptable.

9-4.6.8 250 Volt Receptacles. All 250 volt receptacles will be furnished with matching plugs.

9-4.6.9 Ground Fault Circuit Interrupters (GFCI). Hospital Grade Class "A"GFCI receptacle protection will be provided at locations required by NFPA-70 and "WET" locations. GFCI "WILL NOT BE PROVIDED" on circuits serving critical life support equipment.

9-4.6.9.a Wet Locations. Those areas that are normally subject to wet conditions, including standing water on the floor, or routine dousing or drenching of the work area are classified as a wet location. Routine housekeeping procedures and incidental spillage of liquids do not define a wet location. GFCI receptacles will be used in the following locations:

1. Hydrotherapy.
2. Therapeutic pool areas.
3. Toilet areas with showers.

(a) Staff lockers with toilet areas.

(b) Patient toilet bathrooms.

4. Showers.
5. Staff lounge with kitchen facilities.
6. Outdoor receptacles.
7. Other locations required by NFPA-99 and 70.
8. Receptacles accessible from a building roof.
9. Crawl spaces.

9-4.6.9.b Damp Locations. Damp locations are functional areas infrequently using liquids in operational activities and housekeeping procedures but require special attention such as Toilets, Locker areas which are adjacent to showers areas, Sub-sterile and Scrub areas to Surgery and Delivery and so forth. GFCI receptacles are not required.

9-4.6.10 **Patient Bedrooms**. Critical care patient bed locations will be provided with a minimum of eight identified duplex receptacles, and general care patient bed locations will be provided with a minimum of four duplex receptacles. Receptacle adjacent to the wash basin in patient bedroom toilets shall be provided with ground fault circuit interrupter protection for personnel. All receptacles will be hospital grade.

9-4.6.11 **Renal Dialysis Units**. Two identified hospital grade receptacles shall be provided on each side of the patient bed or lounge chair. Provide one or more normal and emergency critical branch powered receptacles.

9-4.6.12 **Nurseries**. Each intensive care nursery provided with 16 simplex receptacles. Each intermediate care nursery will be provided with eight simplex receptacles. Each nursery in admission, observation, and continuing care will be provided with four simplex receptacles. Normal care nurseries will be provided with one simplex receptacle. Receptacles will be 20-ampere, 125-volt, 2-pole, 3-wire, straight blade, grounded type. Floor mounted receptacles will not be used. Ceiling mounted receptacles or groups of receptacles should be considered for nursery locations not adjacent to a wall or column. A minimum of one 60-ampere, 250-volt, 2-pole, 3-wire, twist lock, grounded type, flush mounted receptacle for mobile fluoroscopy unit will be provided in each nursery.

9-4.6.13 **Operating Room and Delivery Room**. Each operating and delivery room will be provided with 36 simplex or duplex receptacles, 12 in each service column, and six on each wall mounted 900 mm (3 feet) above floor. Receptacles will be 20-ampere, 125-volt, 2-pole, 3-wire, straight blade, grounded type. Each operating and delivery room will also be provided with one 60-ampere, 250-volt, 2-pole, 3-wire, twist lock, grounded-type flush mounted receptacle for mobile fluoroscopy unit or laser photo coagulator.

9-4.6.14 **Laboratory Receptacles**. Above laboratory benches, 20 ampere duplex receptacles will be strip mounted 18 inches on center. Install strips of multi-outlet assemblies above laboratory bench countertops, with 20-ampere duplex receptacles

placed 500 mm (18-inches) on center, or closer. Adjacent duplex receptacles will be connected to different circuits and not more than two duplex receptacles will be connected to each circuit.

9-4.7 **Patient Care Grounding**. General care areas and critical care areas including all anesthetizing locations will be provided with a grounding system as required by NFPA-99 and 70. Grounding system design and initial testing will be included in the contract documents.

9-4.8 **Inhalation Anesthetizing Location**. All inhalation anesthetizing locations will be classified and designed as a nonflammable inhalation anesthetizing location. Operating rooms, delivery rooms, oral surgery, cardiac catheterization and other special procedure rooms are not considered wet areas. Isolated power systems will not be provided except for areas designated as critical care wet areas by the Using Service. Ground fault circuit interrupters will not be provided. Design will conform to the requirements of NFPA-70 and 99. Each operating and delivery room will be provided with two three phase panelboards located within the room. Each panel will be fed from a separate critical branch subpanel and whenever practicable from separate critical branch automatic transfer switches. Panels will be connected to the same phase. Grounding in inhalation anesthetizing locations will be in accordance with paragraph "Patient Care Area Grounding" above.

9-4.8.1 Flammable Anesthetizing Location. Flammable anesthetizing locations may only be used for training in major teaching medical centers and only after approval has been obtained from TMA/PPMD by the using Military Department.

9-4.9 **Electromagnetic Shielding for Medical Instrumentation**. Designated areas of hospitals and health research laboratories may require electromagnetically shielded enclosures. The degree of the attenuation required for the enclosure will be based on the manufacturer's recommendation for the instrumentation to be used in the designated space. Shielded enclosures will conform to the requirements of MIL-E-8881. Final design will specify the type of enclosure and the class of attenuation required. When shielded enclosures are not provided, other measures will be taken to limit RFI and EMI in rooms which contain sensitive medical equipment, including the EEG room and electron microscope room. Incandescent lighting fixtures will be used. Rooms will not be located near or directly above or below electrical equipment or mechanical rooms. High voltage feeders will not be routed in the vicinity of these rooms.

9-5 **LIGHTING**.

9-5.1 **Design**. Lighting design will conform to the requirements of these standards. Electronic ballast are not recommended in areas of medical facilities where electronic (life support) medical equipment is used or areas where invasive procedures are performed, due to possible interference with the equipment. Some examples are operating rooms, delivery rooms, laboratories, special procedure rooms, MRI areas, Medical equipment repair and test areas and other areas of similar use. In no instance shall the lighting footcandle level exceed plus 10 percent for 538.7 Lux (50 footcandles) and plus 53.8 lux (5 footcandles) percent for lower levels. Emergency egress lighting

will conform to the requirements of NFPA 101, and the exit signs will conform to the following requirements:

a. Stencil faced exit signs are recommended.
b. The transilluminated letters will normally be red except where state or country standards mandate green.
c. The contrast level of the letters shall be symmetrical with not less than a 0.7 value, plus or minus 5 percent.
d. The lumination output for normal and emergency mode will be not less than 70 cd/sq m. measured across the face of the sign.
e. The surface finish shall be a matte texture.LED exit signs must meet the above performance criteria and carry a manufacturer's certificate of compliance.

Lighting design and switching will incorporate energy efficient features whenever practicable and consistent with lighting criteria and the functional/operational intent of the hospital. Fluorescent lighting will be provided to the maximum amount practicable, except that infrequently used small storage spaces and janitor's closets may be provided with incandescent fixtures. Exterior lighting will normally be high pressure sodium vapor fixtures. Recessed fluorescent fixtures will be provided in rooms with lay-in acoustical tile ceilings. Fluorescent fixtures may be recessed or surface mounted in rooms with gypsum board on plaster ceilings. Industrial type or open strip type fluorescent fixtures will generally be used in rooms with unfinished ceilings. Fixtures in large storage/supply rooms will be mounted to readily permit relocation within several feet. Fluorescent lamps will normally be 34/40 watt energy saving or 32 watt T8, cool white type, except that 32 or 40-watt chroma 50 type color corrected lamps may be used. Normally, 32 or 40-watt lamps on dimming circuits will be provided as required by Appendix "A" and as indicated herein. Lighting fixtures with color improved lamps will be identified for lamp replacement by an appropriate marking on the fixture reflector. Marking should indicate lamp replacement with the actual design lamp by name only and should not be visible through the fixture lens. Fluorescent lamps of the U-Tube type should not be used. Use of HID fixtures in patient care areas is not permitted. Refer to Section 6, "ENERGY and WATER CONSCIOUS DESIGN," for energy conscious design considerations.

9-5.2 **Battery Operated Lighting**. Fifteen to 25 percent of the general lighting in the operating rooms, obstetrical delivery rooms, emergency treatment rooms, cystoscopy, and cardiac catheterization rooms, and any other room with invasive procedures will be provided with 1 and 1/2 hour battery backup for general illumination which will operate without interruption during periods of normal and emergency power lapse (These fixtures will be fully illuminated when on battery backup or UPS, and providing not less than 500 lux of illumination in the room. All permanently installed surgical task light fixtures will be provided with no-break power to bridge the power interruption between loss of normal power and the transfer to emergency power. Batteries for lights in operating and delivery rooms will be located outside those rooms. Fifteen percent of lighting in nurseries will be provided with 1 and 1/2 hour battery backup. Battery capacity may be reduced to 1/2-hour illumination if backed-up by two or

more emergency generators. A minimum of 1 battery powered light will be provided in the generator set and emergency switchboard location and central communications room.

9-5.3 **Patient Bedrooms**. In patient bedrooms, one wall mounted direct/indirect lighting fixture or a medical wall module system, with lighting features as described herein, will be provided at each bed. Each unit will include upward directed fluorescent lamps for general illumination and downward fluorescent lamps for patient use. The upper fluorescent lamps will be controlled at the door and at the wall unit with a three-way switch. The lower fluorescent lamps for each patient's use will be switched at the bed. All switches will be of the quiet-operating type. Use of low voltage switching utilizing the nurse call handset will be considered. Night-lights mounted in the patient service console will be provided at each bed and will be photo cell controlled and manually controlled at the corridor door.

9-5.4 **Other Rooms**. Fixtures in nurseries, surgery, obstetrical suites, emergency treatment rooms, examination rooms, and laboratories will be recessed fluorescent type. Nurse station lights will be switch controlled to achieve 33, 66, and 100 percent illumination levels. Corridor lights adjacent to intensive care bedrooms and nursing unit will be one-third increment switch controlled. In recovery rooms, coronary and intensive care units and X-ray therapy rooms, where patients may be in a supine position for extended periods, low-brightness diffused lighting will be provided. For examination purposes in intensive care units, isolation rooms, single patient bedrooms, labor rooms and recovery, a four-lamp fluorescent lighting fixture, operated by a conveniently located switch, will be provided above each bed. Fixtures in seclusion rooms will be of the recessed incandescent type, of tamperproof construction with impact-resisting tempered lenses. Seclusion rooms will be provided with tamper resistant incandescent night-lights. Darkrooms will be provided with an incandescent photographic safelight in addition to the normal white light for general room illumination. The safelight is normally considered an item of medical equipment. The "darkroom in use" light, located outside and above the darkroom door, will be controlled by the switch which controls the safelight in the darkroom. The "darkroom in use" light is not required at light-tight type doors. For darkrooms with film loading bins, bin drawers will be interlocked with darkroom white light and safelight so that when a bin drawer is opened, white light is extinguished and safelight remains lit. X-ray rooms will be provided with indirect lighting. The location of X-ray room lights must be coordinated with X-ray equipment. Therapeutic X-ray rooms will be provided with an "X-ray In-Use" light, located outside and above each door. The "X-ray In-Use" light will be controlled by the X-ray unit on-off line power controller. Conduit and wiring from the "X-ray In Use" light to the X-ray unit control console will be provided. Diagnostic X-ray rooms will not be provided with "In-Use" lights. Electroencephalogram rooms will be provided with dimmed incandescent fixtures, refer to Section 15 for more details.

9-5.5 **Dental Clinic**. Ceiling mounted fluorescent lighting fixtures will be symmetrically arranged within all finished areas except open dental operatories. In such operatories, fixtures will be concentrated above the dental chairs. Lighting intensities at the working surface in each dental operatory will be not less than 1076 Lux (100 footcandles) nor more than 1614.4 Lux (150 footcandles) with a minimum of 2 level switching circuits. Where color matching is a critical function, such as in the prosthetics

laboratory and dental treatment rooms, color improved fluorescent lamps will be specified.

9-5.6 **Exterior Signage**. Exterior signage for "EMERGENCY SERVICES" will be stencil-faced with red transilluminated letters, and will be readily visible, identifiable, and legible at all entrance drives. The contrast level of illuminated signage shall be symmetrical and not deviate more than plus or minus 5% percent. Signage for facilities having after-dark operations will have transilluminated letters indicating the facility name. Illuminated signs will be designed for rapid replacement (time not to exceed 15 minutes). Sign location will be coordinated with illumination of access roads, parking areas, and building entrances to minimize requirements for additional illumination of signage.

9-5.7 **Parking Areas and Walks**. Normal site areas, including handicap areas, intended for night use will be illuminated by an average of 10.76 Lux (1 footcandles), measured on 1 foot intervals of incident light on the area served. Parking areas will be illuminated with high pressure sodium fixtures equipped with lamps with dual restrike elements, or high pressure metal halide fixtures and lamps where base standard.

9-5.8 **Dimming**. Eye lane and eye examination room and group therapy observation room illumination will be furnished with recessed fluorescent fixtures and dimmable incandescent fixtures. Switches and dimmers for eye lane and eye examination room will be located close to the examination chair. Maximum footcandle level in group therapy observation room with respect to footcandle level in group therapy (mirror) room should not exceed manufacturer's recommended ratio for one-way mirrors utilized. Fluorescent general lighting in fluoroscopic and radiographic special procedures rooms will be dimmed at the control stand or at the door entrance, as required.

9-5.9 **Ultraviolet Filters**. UV filters shall be provided in infant care areas to prevent retina damage to premature infants and other areas where cataracts are of a major concern. Indirect lighting in premature infant areas shall be provided for all new construction.

9-5.10 **Maintenance Area Lighting**. Interior utility tunnels and walk-in pipe chases will be illuminated by one footcandle of incident light for the safety of maintenance personnel. Switches for these lights will be equipped with pilot lights and located in areas that are normally occupied. Receptacles for temporary work lights will be located at reasonable intervals.

9-5.11 **Auditorium**. The down light fixture over the podium will be controlled from the podium and the entrance.

9-5.12 **Helipad Lighting, Marking and Controls**. Where helipad lighting is required for night operations in visual meteorological conditions (VMC), the lighting will be designed to ANNEX A criteria Perimeter, limit, floodlights, glide slope indicator, wind-indicator and rotating beacon aviation lighting systems will be incorporated into the design. When marking the helipad for day time operations retroreflective paint markings in Figure 9-2 will be used. Lighting will be connected to the essential power supply. See

Chapter 3 for site requirements and ANNEX A for "HOSPITAL HELIPAD SYSTEM REQUIREMENTS." The center perimeter light on each side and the wing-out light are red to symbolize the nighttime international Red Cross symbol. The lighting controls may be pilot and/or hospital radio controlled, or manual at helipad site.

9-6 **LIGHTNING PROTECTION**. Facility lightning protection requirements will be assessed per NFPA-780. Where lightning protection is required; a UL Master Labeled System shall be installed.

Table 9-1. Applicable References

ITEM:	REFERENCE NO:	TITLE OR DESCRIPTION:
1.	MIL-HDBK-1190	FACILITY PLANNING AND DESIGN GUIDE
2.	NFPA-30	FLAMMABLE AND COMBUSTIBLE LIQUIDS CODES
3.	NFPA-37	STANDARDS FOR THE INSTALLATION OF COMBUSTION ENGINE AND GAS
4.	NFPA-70	NATIONAL ELECTRICAL CODE
5.	NFPA-99	STANDARDS FOR HEALTH CARE FACILITIES
6.	NFPA-101	LIFE SAFETY CODE
7.	NFPA-110	EMERGENCY AND STANDBY POWER SYSTEMS
8.	NFPA-780	LIGHTNING PROTECTION CODE
9.	ANSI-C2	NATIONAL ELECTRICAL SAFETY CODE
10.	ANSI Y32.2	GRAPHIC SYMBOLS FOR ELECTRICAL AND ELECTRONICS
11.	MIL-HDBK-419	GROUNDING, BONDING AND SHIELDING FOR ELECTRICAL EQUIPMENT AND FACILITIES (VOL I and II)
12.	MIL-HDBK-1013/1A	DESIGN GUIDANCE FOR PHYSICAL SECURITY OF FACILITIES
13	**UFC 3-520-01**	***DESIGN: INTERIOR ELECTRICAL SYSTEMS***
14.	UFC-3-600-1	FIRE PROTECTION
15.	IEEE C62.41.91	IEEE RECOMMENDED PRACTIC ON SURGE VOLTAGE IN LOW VOLTAGE AC POWER CIRCUITS
16.	IEEE STANDARD 142	IEEE RECOMMENDED PRACTICE FOR GROUNDING OF INDUSTRIAL AND COMMERCIAL POWER SYSTEMS
17.	IEEE STANDARD 241	IEEE RECOMMENDED PRACTICE FOR ELECTRIC POWER SYSTEMS IN COMMERCIAL BUILDINGS

18	IEEE STANDARD 242	IEEE RECOMMENDED PRACTICE FOR PROTECTION AND COORDINATION OF INDUSTRIAL AND COMMERCIAL POWER SYSTEMS
19	IEEE STANDARD 399	IEEE RECOMMENDED PRACTICE FOR INDUSTRIAL AND COMMERCIAL POWER SYSTEM ANALYSIS
20.	IEEE STANDARD 446	IEEE RECOMMENDED PRACTICE FOR EMERGENCY AND STANDBY POWER SYSTEMS
21.	IEEE STANDARD 493	IEEE RECOMMENDED PRACTIC FOR THE DESIGN OF INDUSTRIAL AND COMMERCIAL POWER SYSTEMS.
22.	IEEE STANDARD 519	IEEE RECOMMENDED PRACTICE AND REQUIREMENTS FOR HARMONIC CONTROL IN ELECTRICAL POWER SYSTEMS.
23	IEEE STANDARD 602	IEEE RECOMMENDED PRACTICE FOR ELECTRICAL SYSTEMS IN HEALTH CARE FACILITIES.
24	IEEE STANDARD 1100	IEEE RECOMMENDED PRACTICE FOR POWER SYSTEM AND GROUNDING SENSITIVE ELECTRONIC EQUIPMENT.
25	EIA/TIA 568A	COMMUNICATION BUILDING TELECOMMUNICATIONS STANDARD
26.	EIA/TIA 569A	COMMUNICATION BUILDING STANDARD FOR TELECOMMUNICATIONS PATHWAYS AND SPACES.
27.	EIA/TIA 606	ADMINISTRATION STANDARD FOR TELECOMMUNICATIONS INFRASTRUCTURE OF COMMERCIAL BUILDING
28.	*(a) HB-9-00*	ILLUMINATION ENGINEERING SOCIETY LIGHTING HANDBOOK
29.	UFC 3-400-01	ENERGY CONSERVATION

Annex A. Hospital Helipad System Requirements

1. GENERAL. This criteria is intended to augment the requirements of other Army, Air Force, and Navy aviation lighting and marking criteria by covering those requirements unique to hospital helipads. Standards, which have been established for general airfield use, shall be followed where applicable.

2. DEFINITIONS:

a. HELIPAD. A prepared surface area for fixed facilities or marked turf area for temporary facilities centered within a clear landing area used for takeoff and landing helicopters.

3. SPECIAL CRITERIA:

a. LIGHTING.

(1) PERIMETER. The specific hospital helipad perimeter lighting pattern is illustrated in attached Figure 9-3, HOSPITAL HELIPAD LIGHTING PATTERN, and defined for visual meteorological conditions (VMC) operations in attached TABLE 9-3, HOSPITAL HELIPAD LIGHTING REQUIREMENTS. Spacing, installation and other criteria and standards can be found in Army, Air Force, and Navy aviation criteria.

(2) FLOODLIGHTING. Helipad floodlighting shall be in accordance with using service (Army, Air Force, and Navy) aviation criteria. TABLE 9-3.

(3) LIMIT LIGHTS. Limit lights shall be in accordance with using service (Army, Air Force, and Navy) aviation criteria.

(4) VISUAL GLIDE SLOPE INDICATOR SYSTEM (VGSIS). The VGSIS shall be a two box Chase Helicopter Approach Path Indicator (CHAPI) as required by attached TABLE 9-3. Other guidance can be found in the using service (Army, Air Force, and Navy) aviation criteria.

(5) ROTATING BEACON. The hospital rotating identification beacon shall be specified in accordance with STD DET 40-06-05 and installed per using service (Army, Air Force, and Navy) aviation criteria.

(6) WIND INDICATOR. The wind indicator shall be illuminated in accordance with using service (Army, Air Force, and Navy) aviation criteria.

b. RADIO CONTROLLER. The radio controller shall be in accordance with FAA - AC150/5345-49A, "SPECIFICATION L-854, RADIO CONTROL EQUIPMENT," and function as follows:

RADIO CONTROL OPERATION.

The pilot can activate the hospital helipad lighting by keying the microphone from the helicopter after tuning to the assigned frequency.

The pilot can key his microphone three times within a five second interval and on the third pulse a relay is energized which turns on the wind indicator illumination, CHAPI and the perimeter light pattern.

The floodlights can be activated by keying the microphone five times.

The light will remain on until the pilot keys his microphone seven times. This will activate the turn off time delay relay which de-energize the lights at the end of the 15 minute delay.

When the lights have been activated by the radio controller the "OFF" function of the remote "ON-OFF" switch in the manual controller, located in the hospital ER, will be bypassed.

The brightness of the CHAPI, floodlights and perimeter lights can only be controlled from the manual control panel in the ER.

If the microphone has been keyed seven times, turn off signal, the radio controller can be reset by keying the microphone three or five times.

The hospital ER shall be equipped with the manual controller (SEE attached FIGURE 9-4, HOSPITAL HELIPAD LIGHTING CONTROL DIAGRAM) and a base radio station to be capable of manual or radio operations.

4. DAY MARKING OF HELIPAD. Day marking of the hospital helipad shall be in accordance with attached FIGURE 9-2, HOSPITAL HELIPAD DAY MARKING.

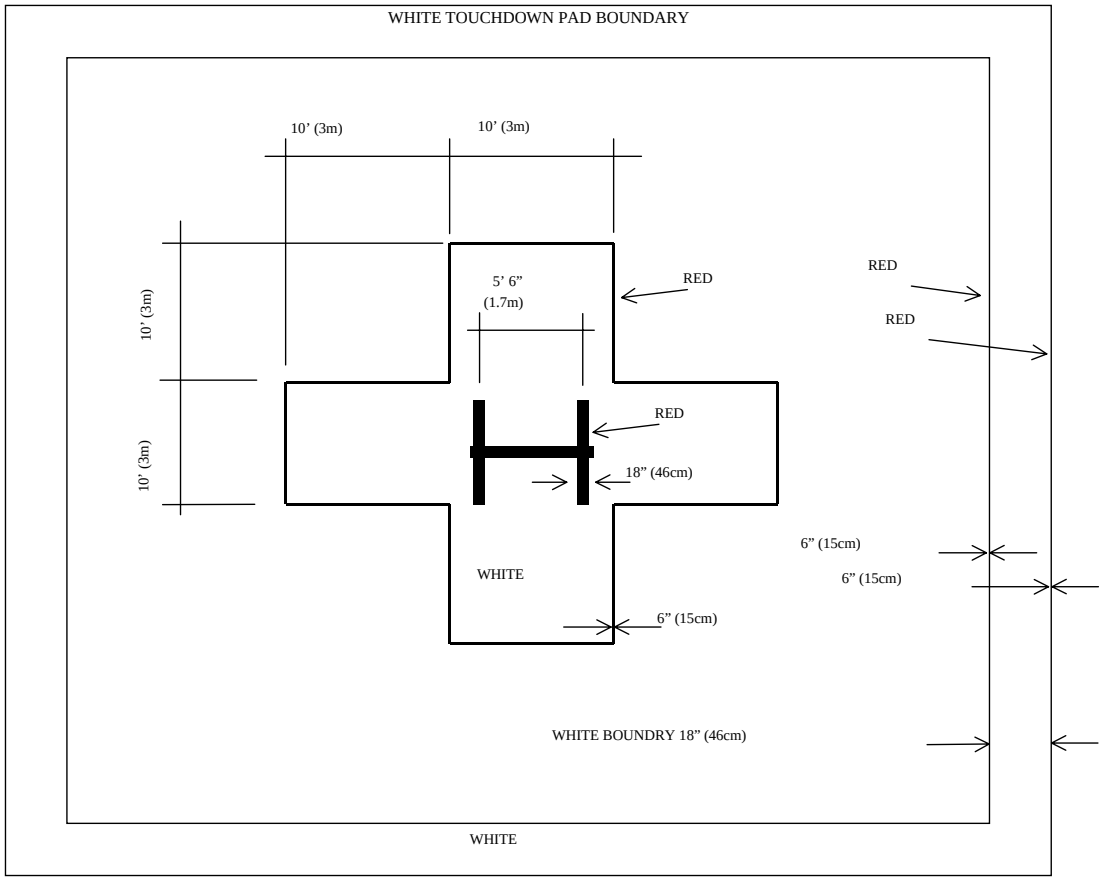

HOSPITAL HELIPAD DAY MARKING

1. The cross and touchdown pad boundary markings are white and may be edged with a 6-inch (15cm) red border to improve visual acquisition. The 10 foot (3m) high letter "H" is red.

2. The touchdown pad boundry marking may be either a solid or segmented line.

3. Retroreflective paint shall be used for day marking (Red 11350 and White TT-P-85E or TT-P-1952).

Figure 9-2. Hospital Helipad Day Marking

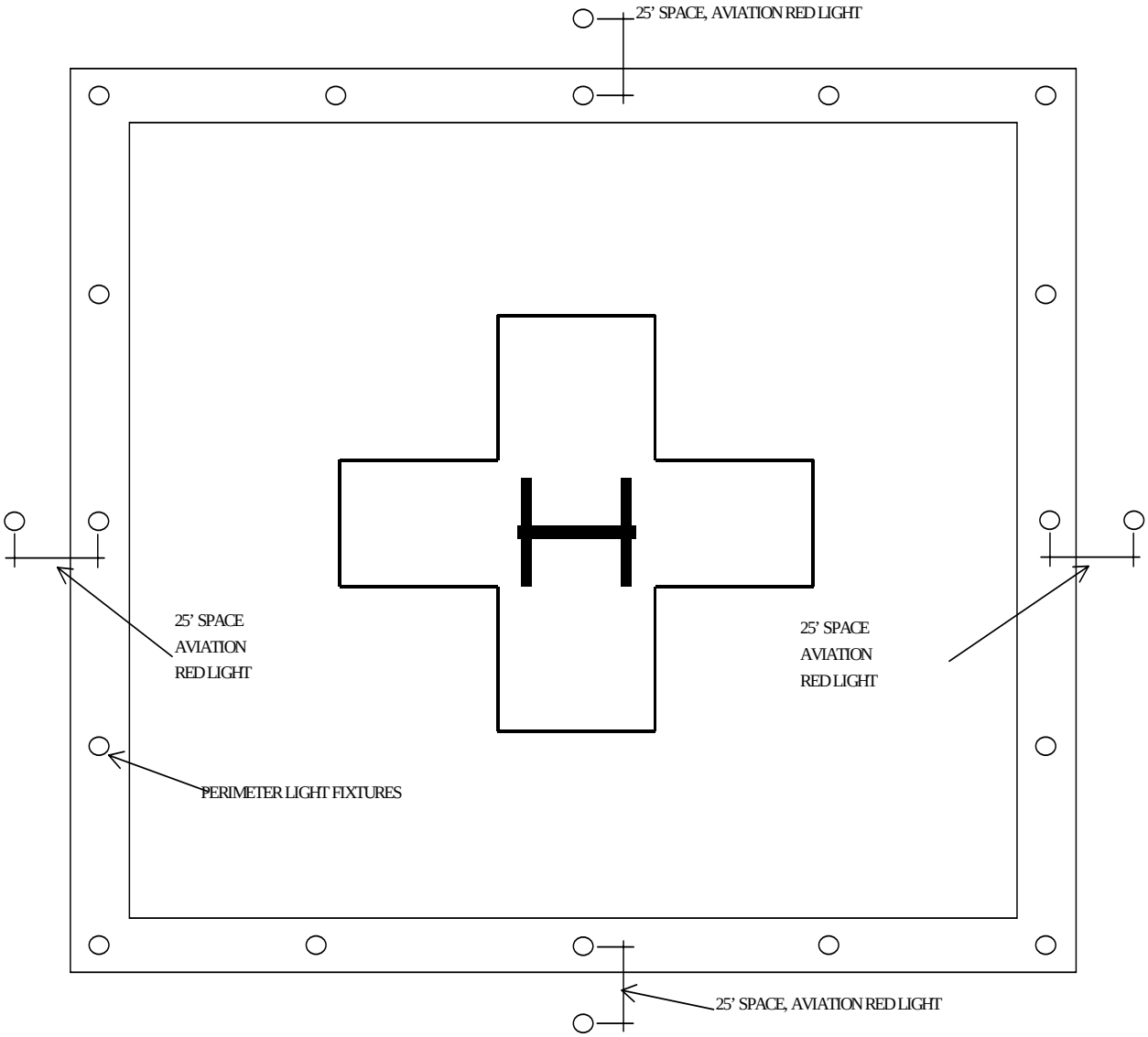

HOSPITAL HELIPAD LIGHTING PATTERN

1. All perimeter lights are aviation yellow, Except for those identified above as aviation red. The spacing criteria between perimeter fixtures is covered in other using service (Army, Air Force, and Navy) aviation criteria.

2. Types of aviation light fixtures are covered in STD DET 40-06-05, ARMY AVIATION LIGHTING FIXTURES and other using service (Air Force, and Navy) aviation criteria.

Figure 9-3. Hospital Helipad Lighting Pattern

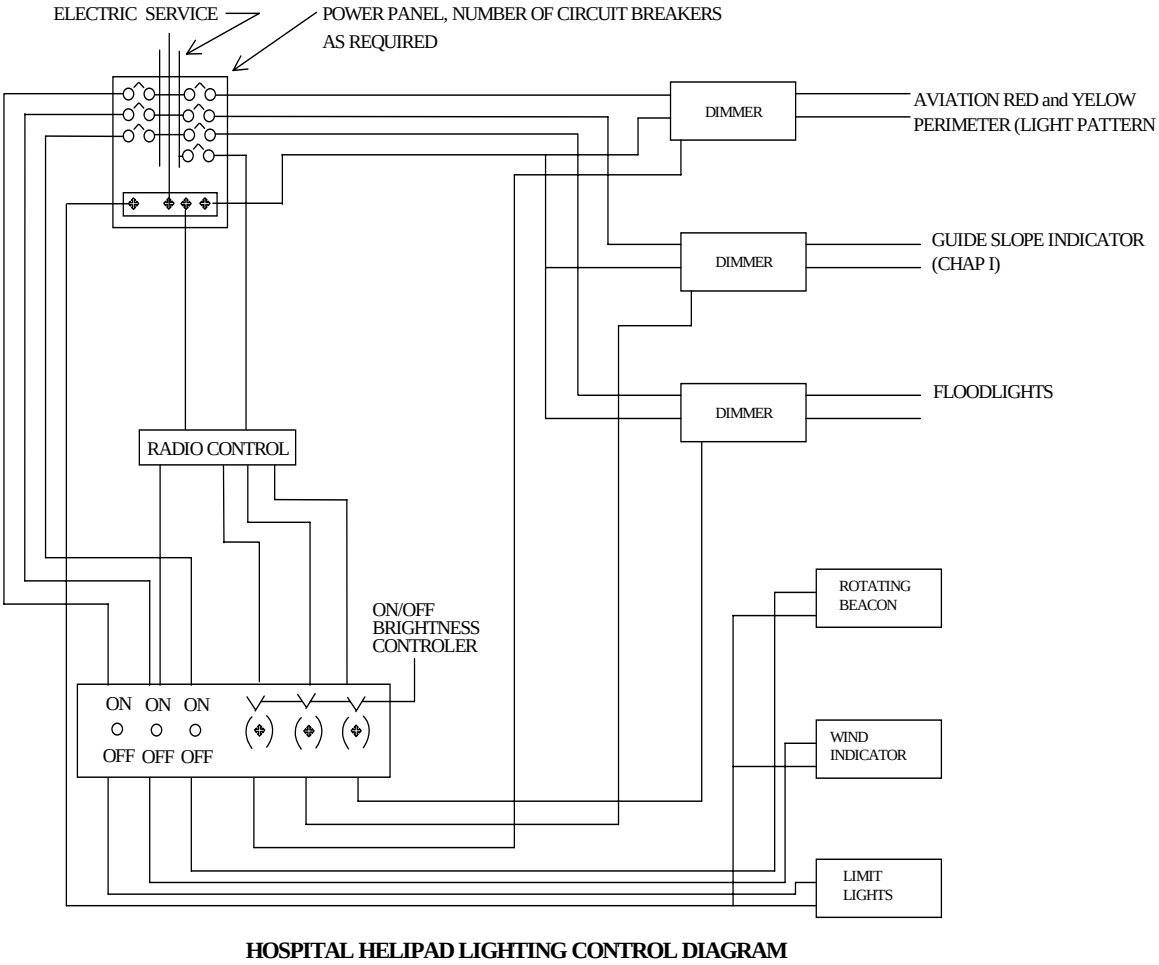

Figure 9-4. Hospital Helipad Lighting Control Diagram

Table 9-3. Hospital Helipad Lighting Requirements.

FACILITY	DAY VMC NON-INSTRUMENT	DAY and NIGHT VMC NON-INSTRUMENT	FIXTURE TYPE
Aviation Red, Perimeter Omnidirectional Pattern Lights	O	X	SEE STD DET 40-06-05
Aviation Yellow Perimeter Pattern Lights	O	X	SEE STD DET 40-06-05
Floodlights Lights	X	X	SEE STD DET 40-06-05
Limit Lights	O	O	SEE STD DET 40-06-05
Wind Indicator	X	X	SEE STD DET 40-06-05
Rotating Beacon	X	X	SEE STD DET 40-06-05
Glide Slope Indicator (CHAPI)	O	X	SEE STD DET 40-06-05
DAY MARKING RETROREFLECTIVE PAINT	X	X	SEE FIGURE 9-2
CONTROLS	X	X	SEE FIGURE 9-4
EMERGENCY POWER	X	X	SEE PARAGRAPH 9.5.12

NOTES:

X - REQUIRED
O - OPTIONAL

SEE UFC 3-535-01, “VISUAL AIR NAVIGATION FACILITIES”, for technical requirements, or other using service (Air Force, and Navy) aviation criteria.

Table 9-4. Sample Nonlinear Load Analysis Matrix

SERVICE MODULE TYPE	TOTAL RECEPT KVA	ESTIMATED NONLINEAR KVA	MODULE XFMR SIZE	NONLINEAR % OF TOTAL KVA	XFMR K FACTOR RATING
Clinic					
Logistics					
Dentistry					
Pulmonary					
ICU					
Surgery					
Food Service					
Labor/Delivery					
CCU					
ICU					
Orthodontics					
Physical Therapy					
CMS					
Nuclear Medicine					
Emergency					
Waste Management					
Materials					
Radiology					
Collecting Labs					
Pathology					
Chemistry Labs					
Pharmacy					
Social Work					
Auditorium					
Patient Services					
Nursing (3 Mods)					
Administration					

Annex B. Multi-Ended Network Substation

1. GENERAL. The multi-ended network (FULLY AUTOMATIC) substation (Figure 9-5 and 9-6) design philosophy eliminates many switching time delays; simplifies the monitor and control functions; standardized equipment; reduces equipment size; provides expansion capability for future load growth and maintains reliability, durability, and maintainability. When using the multi-ended network or the double-ended substation to replace an existing substation, all down stream equipment requires short circuit current validation, and power system coordination.

2. NORMAL HOSPITAL SOURCE ALTERNATE DESIGN CONFIGURATION. For electrical design criteria related to power supply, see documents listed in “TABLE 9-1 APPLICABLE REFERENCES." Hospitals will be served by two primary service feeders each connected to one side of the automatic (with alternate manual operator) load break primary selector switch with manual load break by-pass isolation switches that serves a multi-ended network substation (Figure 9-5). Each feeder shall have the capacity to serve the full hospital demand plus 20 percent spare load growth, and shall be installed underground within the hospital site. The primary selector switch with by-pass isolation switches will have the capacity to serve not less than the sum of the three transformer's kva rating, and have load limiting equal to the full hospital demand plus the 20 percent spare load growth. The automatic function will monitor both primary feeders, and if power is lost to the feeder serving the load, the load will be transferred to the other feeder in not more than 30 cycles if power exists on that primary feeder. Service feeders will be connected to different power sources, if available, and to two differently routed distribution system feeders. Where two power sources are not available, the service feeders may be connected to two different sections of a true loop system. Transformers will normally be located outside the hospital, but may be located within the building where practicable and economical. Multi-ended network substation distribution systems will be designed for hospitals, medical centers and specially designated facilities. Each transformer in the multi-ended network transformer substation will be sized to carry 50 percent of the full hospital demand and spare load (linear and nonlinear) growth capacity. All transformers will be identical and impedance matched. All multi-ended network transformer substations will have coordinated surge and fault protection. The system protection will be selective.

3. AUTOMATIC PRIMARY FEEDER SELECTOR SWITCHES (APFSS). *(This is not to be construed as an automatic transfer switch)* The APFSS may be double-throw with draw-out construction. The APFSS rating will be not less that the sum of the three transformer kva ratings, and have adjustable load or fixed limiting control (the loading control may limit the capacity to that of two transformers). Contacts may have viewing ports for ease of contact inspection. The APFSS will have indicator lights to identify which normal primary feeder is connected to the load (green in color). Load transfer to either normal primary feeder will be achieved with not more than 30 cycles of load interruption. All APFSS will be equipped with load break by-pass isolation switch to maintain normal primary service feeder connection or when the APFSS is being repaired or maintained. The by-pass isolation switch can be initiated with not more than two movements of the hand to either position regardless of the position or condition of the APFSS. Two vacuum power circuit breakers with load break by-pass isolation switch may be used.

4. TRANSFORMERS.

(a) Each service entrance transformer of the multi-ended substation with fans is sized to carry 40 percent of the design load as to utilize standard off-the-shelf units and increase transformer efficiency. Each of the three transformers are equipped with forced

air-cooling fans to increase the continuous capacity rating of each transformer by 34% to 50 + percentage of the design load when activated. The fans are automatically activated when the load on any transformer exceeds the no fan rating. The temperature indicator and the current relay will activate the cooling fans. If the fans are not activated when the temperature indicator and/or the current relay exceed the manufacturer's setting, and alarms will be sounded so load shedding can be initiated. Each transformer must carry a 10 percent overload for short periods of time without fans.

(b) If a service entrance transformer fails, off line for maintenance, or the normal bus receives no power from any one of the service entrance transformer feeders, the fans on the remaining two service entrance transformers will be automatically activated allowing 100 percent of the total hospital load to be assumed. There is no time delay in the load shifting to the remaining two transformers.

(c) Where each transformer of the multi-ended network substation is sized for no fan application, each transformer will be sized to carry not less than 50 percent of the full hospital demand and spare load (linear and nonlinear) growth capacity. Each transformer feeder serving the normal bus will be equipped with an alarm to indicate power loss from that feeder to the normal bus.

(d) The transformers in the multi-ended network substation will be identical and impedance matched.

5. 52 DEVICES. The 52 devices (AC power circuit breaker devices, draw-out type) will be sized to support the transformer capacity.

(a) The equipment will be laid-out in a manner which allows load center expansion, without requiring replacement. New sections can be added to either end of the load center.

(b) The main load center bus will be sized for not less than the sum of the three transformer kva rating.

6. GROUND FAULT. Ground fault protection for medical facilities will conform to those requirements in NFPA-70 and 99, and UFC 4-510-01.

7. STANDARDS. All metering will read true RMS, and the protective relays and devices will comply with IEEE standards.

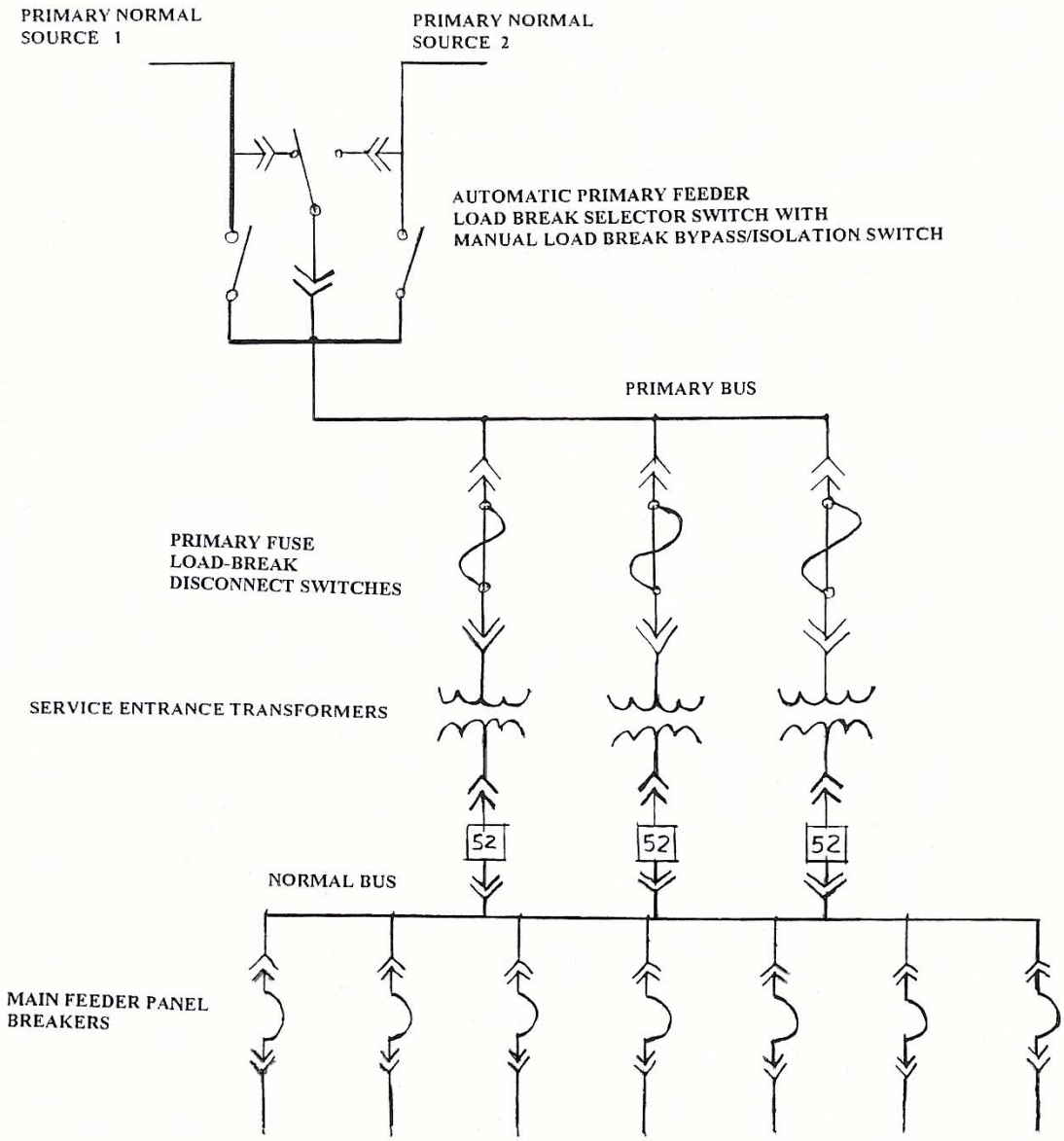

THE MAIN FEEDER PANEL BUS CAPACITY WILL BE NOT LESS THAN THE SUM OF THE TRANSFORMERS CAPACITY.

Figure 9-5. Multi-Ended Network Substation System Diagram

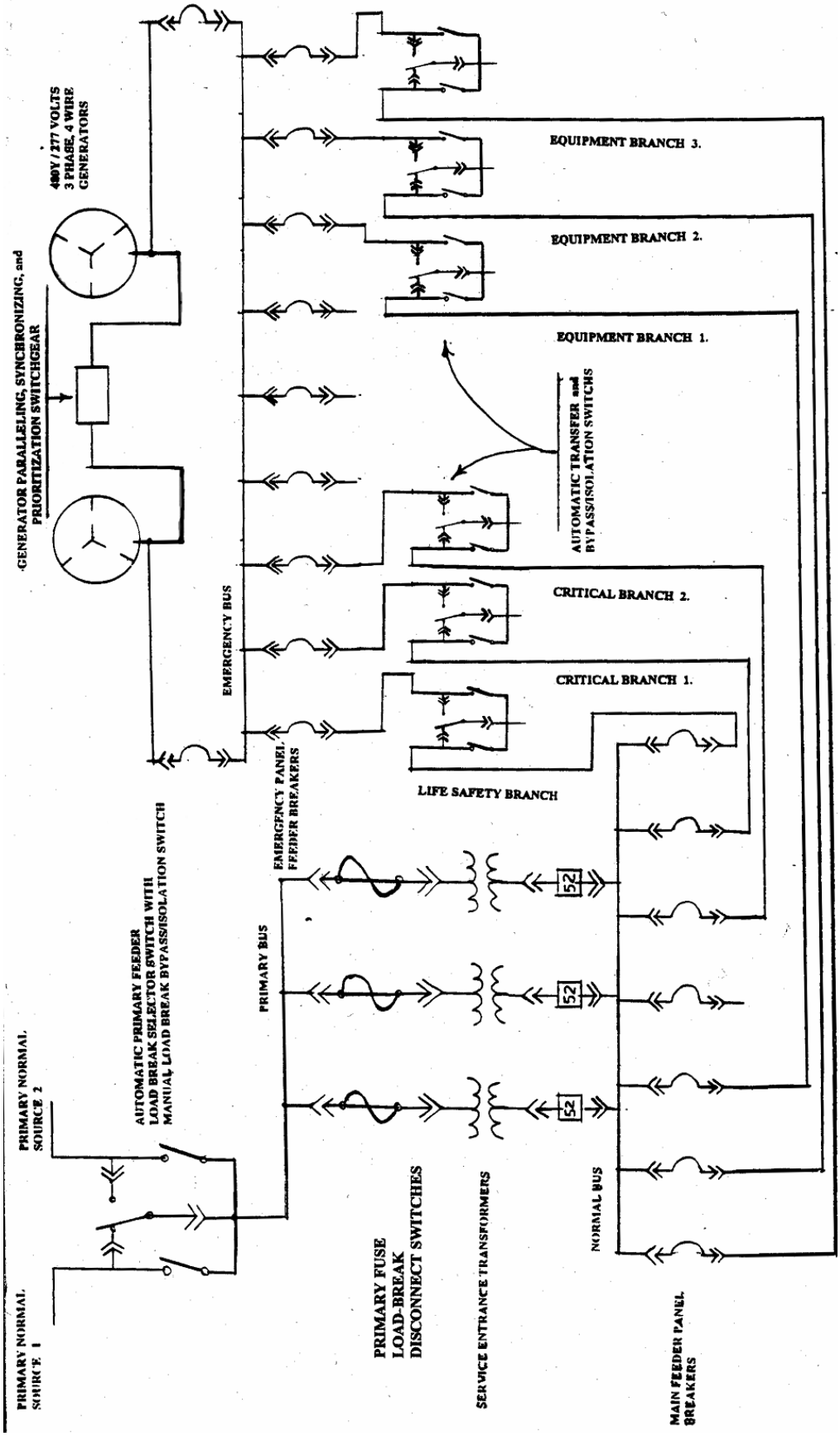

Figure 9-6. Multi-Ended Network Substation and Emergency Power System Diagram

SECTION 10

COMMUNICATIONS

10-1 **INTRODUCTION.** The planning and engineering of communications systems for health facilities will conform to the design criteria contained in this section. Department of Defense Medical Facilities use various integrated voice data, imaging, information, electronic security and telemedicine systems to provide quality healthcare to DOD personnel. All references are included at the end of this section.

10-1.1 **Construction**. All construction will require application of detailed communications engineering concepts, with consideration of system size, organization, function and cost.

10-1.2 **Applicability**. All communications systems described herein, will be designed, procured, and installed under the Military Construction Defense Medical (MCDM), Operations and Maintenance and other programs.

10-1.3 **Seismic Design**. Seismic design requirements will be in accordance with Section 5.

10-1.4 **Design Criteria**. Communication systems, equipment and facilities will be designed in conformance with the Americans with Disabilities Act and Architectural Barriers Act Accessibility Guidelines (UFAS/ADAAG), NFPA 70, NFPA 99, NFPA 101, TIA/EIA 568, TIA/EIA 569, TIA/EIA 606, TIA/EIA 607,TIA/EIA 758 and applicable using Service standards and criteria. See references at the end of this section.

10-2 **COMMUNICATIONS SYSTEMS ACQUISITION**. Communications systems and equipment authorized for procurement and installation are identified in section 1 of this document.

10-3 **PLANNING, DESIGN, AND CONSTRUCTION RESPONSIBILITIES**. Communications systems for medical facilities will incorporate the latest proven technology and equipment. Integration and coordination of various communications systems are especially demanding since several government agencies and the designing firm are involved. The government agencies include the Design and Construction Agent, medical facility planning agent (Army: HFPA; Air Force: HFO; Navy: BUMED) and information systems support agent for the using Service. The responsibilities of each agency and the designer include:

10-4 **COMMUNICATION DISTRIBUTION FACILITIES**. Communications systems distribution and support facilities will be provided as described herein:

10-4.1 **Exterior**. Design of the exterior cable system will be interfaced with the existing installation cable network and based on the requirements of the project. All exterior cable will be installed underground to the extent it is financially and physically feasible and not in conflict with the installation architecture. The primary route from the new facility to the Installation network will be a concrete encased duct bank to the nearest available service point.

10-4.1.1 Funding. Funding for the facility will include the cost of the cabling, duct bank and new manholes to connect to the nearest available operational service point in the installation infrastructure system. Outside plant cables should be used to provide communications service from the Installation Dial Central Office, (DCO). Project funds for new outside plant cables will be used when no existing outside plant cable is available. The additional cost of outside plant cabling required for communications systems to connect to the nearest available service point on each system will be included with the new facility.

10-4.1.2 Design Considerations. The number and size of conduits installed will provide for current needs and for reasonable future expansion. Design will be based on the forecasts for the telephone system line and trunk load and all other cable systems using the duct bank. The design analysis shall include the basis for conduit quantities used. Design of duct bank and manholes shall be based on ANSI/TIA/EIA 758.

10-4.2 **Interior**.

10-4.2.1 Cable Tray. Provide cable trays above the suspended ceilings in the corridors for all communications systems cables. Cable trays shall be located just above the ceiling and shall be designed and installed to insure ease of accessibility for future wiring changes. The cable tray system design and installation shall be in full compliance with ANSI/TIA/EIA 569.

10-4.2.2 Communications Rooms. The communications rooms will be sized and provided utility support in accordance with ANSI/TIA/EIA 569. Communications rooms shall be a minimum of 9 m^2 (100 square feet) each. In multistory facilities, communications rooms will be provided on each floor and vertically aligned to facilitate connection of all communication system riser conduits and wiring. Utility outlets will be on a dedicated circuit of the equipment branch of the emergency power system. Each equipment location will be provided with appropriate dedicated AC power. See table 10-1 for specific power circuit branch assignments and section 9 for general power system information. Insure that AC power from the appropriate emergency power branch is provided for each communication system. A penthouse equipment room, when required in hospitals and medical centers, shall be provided. The room is used to house radio equipment for the radio paging system, the television system and the ambulance emergency medical system (EMS). Also provide conduit penetrations to antennas for coaxial cables and emergency power for equipment in accordance with Table 10-1.

10-4.2.3 Communications Head End Equipment Room. A separate communications equipment room with sufficient space for personnel circulation and equipment maintenance will be provided in hospitals and medical centers for head end equipment such as television, public address and program distribution, radio, and data communications equipment. This room will be located adjacent to the telephone system equipment room. This function will be supported by a communications room in clinics. Circuit breaker panels fed from the appropriate emergency system branches, as shown in table 10-1, shall be installed in the room to serve the head end equipment. Design of the room including utility support shall be in accordance with ANSI/TIA/EIA 569.

10-4.2.4 Central Communication Room. A central communication room will be provided in hospitals and medical centers. The central communication room will be located as directed by the Using Service. The central communication room size will be based on the quantity of wall mounted graphic displays, annunciator displays and other monitor and control equipment. Install monitors, annunciators, and control equipment in the room for any or all of the following systems per using service direction:

- Engineered smoke control system (ESCS).
- Fire detection and alarm system.
- Generator monitor and alarm system.
- Medical gas monitors and alarms.
- Closed circuit TV (CCTV) for security (space designated for monitor and programmable system and control equipment and videocassette recorders).
- Refrigeration temperature monitor and alarm system (blood bank, food, pharmaceuticals (pharmacy and logistics) and morgue).
- Public address master microphone and paging zone selector panel.
- Radio paging console.
- Telephone attendant console.
- Security system console.
- Electronic Private Branch Exchange (EPABX) alarms.
- Pneumatic tube system control equipment

10-4.2.5 Main Computer Room. A separate main Information Systems computer room shall be provided when required by the using Service. The room shall be sized to accommodate the equipment planned for installation in the space. The designers will accommodate power distribution, HVAC with temperature and humidity controls, access control, fire detection and alarm, uninteruptable power supplies, voice and data equipment in addition to the basic computer equipment. The room will be equipped with sound dampening finishes. A raised floor will be provided if required by the using service.

10-5. **TELEPHONE SYSTEM REQUIREMENTS**.

10-5.1. **Central Telephone Equipment**. The facility shall receive telephone service either from an internal Telephone Switching System (TSS) or served from the installation DCO as prescribed by the facility requirements and site specific information. An internal TSS is required in all hospitals, medical centers and other medical facilities as required by the using service. The TSS may consist of a Private Branch Exchange (PBX) or Remote Switching Center (RSC) as directed by the using service. The TSS will be capable of being upgraded to provide a national non proprietary ISDN service. If ISDN service is required by the using service it shall be a national nonproprietary ISDN service.

10-5.1.1 Facilities. The following will be provided when a TSS is installed: service entrance conduits, a main distribution frame (MDF), a 5 ohm (maximum) signal grounding system in accordance with MIL-HNBK-419 and NFPA 70, power from the emergency life safety branch and a DC power supply consisting of dual rectifiers and sealed, low maintenance batteries. Batteries shall have a minimum capacity of two hours at full load. Each rectifier shall be sized to simultaneously operate the fully loaded TSS and charge the batteries. Multiple element surge protectors shall be installed on the AC input to the telephone system. These devices shall provide clamping to limit any transients and surges on the line to prevent damage to the rectifiers and the telephone system. In locations where the Installation AC system is known to have problems with high transients and voltage variations on the network, power conditioners shall be installed on the AC input to the telephone system. Heat detectors shall be provided in the TSS room. The heat detectors shall be used to shut off both AC and DC power to the TSS equipment prior to sprinkler heads being activated. A sprinkler system will be provided in the telephone system equipment room, see section 12 for sprinkler system criteria. When the sprinkler system is activated the AC and DC power to the telephone system will be automatically disconnected. The room shall be designed in accordance with ANSI/TIA/EIA 569 and be large enough to accommodate the telephone system and all support equipment and have adequate equipment access, clearance and work space. The electrical and air conditioning services for the telephone system equipment room shall be sized to accommodate the worst case commercial system based on the telephone system maximum operational capacity. The complete air conditioning system for this room will be powered from the equipment branch of the emergency power system.

10-5.1.2 Telephone system line/port count. Designer shall work with the using Military Service to determine the Total Line Count (TLC) required. Line and port as used in this Unified Facilities Criteria (UFC) have the same meaning. Since a TSS has a digital computer as a central control unit the point of connection for each external device (telephone instrument or trunk circuit) is called a port. Each single line telephone is connected to its own dedicated port which has a unique telephone number. There will be no multiple connections of single line instruments to a port. Each electronic feature phone is also connected to its own dedicated port, however, due to the type of line circuit cards required for these units, multiple telephone numbers can be assigned to each port. When determining the TLC each single line phone will be counted as one line and each multi-line electronic feature phone shall also be counted as one line regardless of the number of lines. Designer shall work with the using Military Service to determine the Total Line Count (TLC) required. Line and port as used in this Unified Facilities Criteria (UFC) have the same meaning. Since a TSS has a digital computer as a central control unit the point of connection for each external device (telephone instrument or trunk circuit) is called a port. Each single line telephone is connected to its own dedicated port which has a unique telephone number. There will be no multiple connections of single line instruments to a port. Each electronic feature phone is also connected to its own dedicated port, however, due to the type of line circuit cards required for these units, multiple telephone numbers can be assigned to each port. When determining the TLC each single line phone will be counted as one line and each multi-line electronic feature phone shall also be counted as one line regardless of the number of lines.

10-5.1.3 TSS Subscriber Line/Port Capacity. The TSS subscriber port capacity shall satisfy three different growth categories. The initially installed capacity (IIC) shall equal the TLC port count plus 15 percent (minimum). The IIC refers to a fully equipped telephone system requiring only the connection of telephone instruments to activate the port capacity specified. The fully wired capacity (FWC) provides for expansion of the port count beyond the IIC port size by requiring only the insertion of additional subscriber line cards and connecting telephone instruments. The FWC shall equal the TLC port count plus 40 percent (minimum). The third category is the maximum operational capacity (MOC) of the telephone system. The MOC shall equal the IIC port count plus 100 percent (minimum). The MOC provides for long term expansion of the facility by the addition of cabinets, power supplies, processors, and other equipment to expand the telephone system within its design limits. The IIC, FWC, and MOC port counts shall be included in the telephone system specifications.

10-5.1.4 TSS Trunk Capacity. As a minimum, the number of trunk ports allotted for each category shall be 15 percent of the IIC, FWC, and MOC. The number of trunk circuits initially installed inside the telephone system on trunk circuit line cards shall be 15 percent (minimum) of the IIC.

10-5.1.5 Call Detail Recording (CDR). The TSS shall include software and hardware to provide a CDR function. The CDR shall enable the staff to establish accounting data for each station and trunk to include billing and traffic data. The CDR shall collect data on all calls made in the system, including all incoming and outgoing trunk calls. The CDR system shall provide software flexibility to enable the user to tailor the format of the reports produced on the CDR printer. As a minimum, the CDR system shall identify the station placing the call, telephone number dialed, date and time of day, call connect time, call duration, trunk type, cost, and either a cost center identification code or other code keyed to an organization or activity. The CDR will also enable the user to perform TSS traffic studies to show maximum busy hour calls and dial tone delay data.

10-5.1.6 System Features. The telephone system shall include an automatic diagnostic system with local and remote alarms, remote diagnostics hardware and software, local printouts of system reports and maintenance and alarm data and a power fail-auto-restart feature as well as any other features and functions required by the Using Service.

10-5.1.7 Automatic Call Distribution (ACD) / Auto Attendant (AA). An ACD and/or AA, if required by the using Service, will be provided. Sufficient telephone lines to the ACD and/or AA as well as dedicated commercial circuits which bypass the DCO will be provided, when required, for the efficient operation of the system. All incoming lines will be answered on a first-in first-answer basis. When all ACD operators are busy, incoming calls will be placed on hold after receiving a prerecorded message and will be served by the first available operator. When offices are closed (nights, weekends, holidays), all calls will be transferred to a recording device for accepting appointments and cancellations. The ACD shall provide a workload recording system. The workload recording system shall come equipped with a printer. The system shall record data and generate reports indicating the number of calls placed and received by each attendant,

the number of uncompleted incoming calls due to a busy signal or hang-up, call answer time, call duration, calls waiting, calls completed by each attendant and the number of times all positions are busy and the duration of each busy period. Design shall include expansion capability to add additional operator stations and incoming lines.

10-5.2 **Direct Telephone Service From the DCO**. When telephone service is connected directly from the DCO to the medical facility telephone sets service entrance conduits, a Building Distribution Frame (BDF) and power from the equipment branch of the emergency power system, if available, shall be provided in the service entrance facility.

10-5.3 **User Station** (**telephone**) **Features**. The following features are the minimum to be furnished with the Telephone system software package and the telephone instruments:

Call Transfer/Consultation Hold/Three Party Conference.
Camp-on.
Progressive Conference.
Abbreviated Dial/Speed Call.
Executive Bridging*
Do Not Disturb.
Call Forwarding.
Call Forwarding-Busy.
Call Forwarding-Don't Answer.
Call Waiting.
Call Intercept.
Alternate Routing.
Direct Inward Dialing.
Direct Outward Dialing.
Abbreviated Dial Ring Down Groups.
Call Pick Up.
Voice Mail.
Prerecorded Messages.
Caller ID
Caller ID Block
Call Trace

* This feature will be restricted to the command section and those areas listed in table 10-2.

10-5.4 **Integrated Intercommunication** (**Intercom**) **System**. Except for the dedicated intercom systems listed in other parts of this chapter, all intercom functions will be engineered into the telephone system. These intercom systems will be completely provided by the telephone system hardware and software with no external equipment. All intercom system calls will be private line (two subscribers) except when callers use three party conference or executive bridging. Each intradepartmental intercom system will be accessed via a separate function button on the subscriber electronic feature telephone. An abbreviated dial code shall be dialed to access stations.

10-5.4.1 Intradepartmental Intercom Systems. Subscribers within a dedicated group will be provided an efficient means of two-way voice communication. Intradepartmental intercom will be provided among department heads, secretaries, NCOICs and other staff members who converse on a frequent basis. The intradepartmental intercom groups will be identified on the TSRM by assigning an appropriate alpha numeric code to each station on the group.

10-5.4.2 Interdepartmental Intercom Systems**.** There will be no interdepartmental intercom networks on the telephone system. However, in order to assure that critical medical care areas can reach any office in the facility during an emergency, the executive bridging feature shall be assigned to all telephones in those areas. A list of critical care areas is shown in Table 10-2. That table will be used during TSRM development to assure all critical medical care areas are assigned this service.

10-5.5 **Service Class**. CONUS stations will be assigned service class dial access authorization as described in the following class categories:

AA: Medical facility, on-installation, local commercial, DSN, and long distance commercial.
A: Medical facility, on-installation, local commercial, and DSN.
C: Medical facility, on-installation.
H: Medical facility.
P: Commercial pay telephone. Outside CONUS (OCONUS) stations will be assigned service class as above except class A will be medical facility, on-installation, local commercial, and intratheater (Europe and Korea).

10-5.6 **Telephone Instrument Types**. The various types of instruments in a medical treatment facility are as follows:

E* - Electronic feature phone set
D - Single line desk/set
ES* - Electronic feature phone set w/speaker/microphone
DS** - Single line desk set w/speaker/microphone
W - Single line wall set
WS** - Single line wall set w/speaker/microphone
P - Pay phone, local telephone company will provide and install set

* Electronic feature phones have a multi-line (multiple telephone numbers and features) capability. These phones are typically analog instruments, but may be a digital instrument.
** Non electronic speaker phones may require a power outlet for proper operation.

10-5.6.2 Patient Bedside Telephones. Telephones with dial pad in the handset or handset integrated into bedrail will be provided in patient bedrooms.

10-5.6.3 Public Pay Telephone. Pay telephone will be positioned to accommodate handicapped individuals and patients in wheelchairs in accordance with Uniform Federal Accessibility Standards and/or Americans with Disabilities Act. Mil-Hnbk 1012/3

provides information for locations and mounting heights. Pay station outlets will be placed in locations that are quiet and conveniently located near high traffic areas. Outlets will provide 0.25 meters of coiled telephone cable behind a blank cover plate and adjacent 120v ac outlet.

10-5.7 **Elevator Premises Distribution System Outlet**. Telephone connection shall be provided in elevator machinery rooms for each elevator car for the connection of elevator telephone sets. Telephone instrument should be furnished by the elevator supplier and be a direct ring down/hot line to a 24 hour staffed location. See section 16 for coordination with Elevator systems.

10-5.7.1 Standard Room Outlets. Doctor's offices, exam room and other standard nominal offices in outpatient clinics will be provided with 2 desk Premises Distribution System (TIS) outlets, however, only one telephone instrument will be provided in each room.

10-5.7.2 Conference Room Outlets. Conference rooms may contain outlets to support video teleconferencing and emergency operations as required by the using service.

10-6 **TELECOMMUNICATIONS INFRASTRUCTURE SYSTEM** (**TIS**). A TIS will be provided throughout the facility and will be designed and installed in accordance with the most current version of Mil-HNBK–1012/3 ANSI/TIA/EIA 568, ANSI/TIA/EIA 569, ANSI/TIA/EIA 606, and tested in accordance in accordance with the basic link test of ANSI/TIA/EIA 568 using level II accuracy. The TIS shall be a universal wiring network to serve all of the voice and data needs of the facility. The TIS will include both horizontal and backbone unshielded twisted pair (UTP) copper cables and fiber optic horizontal and backbone cables. The TIS will support voice, facsimile, data and other special services within the facility. The TIS cables shall be installed in conduit and cable tray. All cables shall be terminated on both ends. For OCONUS installations shielded twisted pair cables may be required by the using military service.

10-6.1 **UTP Backbone Cable**. A dedicated multi pair UTP copper cable to support voice applications shall be run from the building distribution frame (BDF) to each communications room. The cable shall be rated category 3 or higher per TIA/EIA 568. The backbone cables shall be sized to accommodate the initial installed capacity plus fifty percent spare capacity. In facilities with an installed TSS the associated main distribution frame (MDF) shall replace the BDF cited above.

10-6.2 **Fiber Optic Backbone Cable**. Fiber optic cables shall connect all of the communications rooms with the fiber building distribution frame (FBDF). The FBDF shall be located as directed by the using service. The type and quantity of fiber cables shall be coordinated with the using service. Patch panels shall be used to terminate all backbone fiber optic cables.

10-6.3 **Horizontal Copper Cable**. The horizontal cable shall consist of 4 pair UTP cable rated category 6 or higher. The cable shall be installed between the communications rooms and the user outlets. The horizontal UTP cable shall support the voice and data needs of the user. The use of horizontal UTP rated higher than

category 6 shall be permitted when standards become available for cable performance and testing.

10-6.4 **Horizontal Fiber Optic Cable**. Horizontal fiber optic cable shall be installed on an as needed basis, or as required by the using service.

10-6.5 **TIS Outlets**. TIS outlets shall be located to support user work stations throughout the facility. A standard outlet shall consist of 12 centimeter square backbox with a dual 1.6 centimeter plaster ring. The cover plate shall include a minimum of 6 available positions for jacks. All UTP jacks shall be 8 pin modular rated at category 6 or higher per ANSI/TIA/EIA 568. Standard outlets shall as a minimum contain one jack for voice service and two marked for data service. The using service shall provide input on the outlet density and number of jacks required at each work station and each faceplate based upon known current needs at the time of facility opening. The facility shall not be wired to support uncertain future possible changes. Desk outlets shall be mounted 0.45 meters (18 inches) AFF.

10-6.5.1 Wall Telephone Outlets. Telephone outlets designed to support wall mounted telephone sets shall be ADA compliant. Faceplates for wall height telephone outlets shall have one ANSI/TIA/EIA category 6 rated jack and studs for mounting a wall type telephone set. Where restricted by casework, outlets shall be adjusted and appropriately noted on the floor plan and elevation.

10-6.5.2 Modular Furniture Outlets. Modular Furniture Outlets may be accommodated by the use of consolidation points or standard wall outlets as allowed by ANSI/TIA/EIA 568. The Intermediate Termination Point (ITP) may be located either above the ceiling, in the IBS located below the floor or on the wall with connecting conduit to the modular furniture connection point. The use of “power poles” is permitted if approved by the using service.

10-7 **DEDICATED INTERCOM SYSTEM**. Dedicated intercom systems shall be provided in play therapy mirror rooms and group therapy mirror rooms if required by the using service. In these areas, speaker-microphones will be installed in the therapy rooms for two way sound communication with the adjoining mirror room.

10-8 **ENTERTAINMENT AND EDUCATIONAL TELEVISION (TV) SYSTEM**. A complete TV system consisting of a headend component and a distribution component shall be provided.

10-8.1 **Television signal Source**. Source of the TV signal shall be from a Cable Antenna TV (CATV) provider, a Master Antenna TV (MATV) or a Satellite Master Antenna TV (SMATV) system. While CATV is the preferred source, the recurring cost of this option, based on the installation contract with the supplier, may make it prohibitive. The choice shall be based on an economic analysis of the three options.

10-8.1.1 Headend. For hospitals and medical centers, the headend shall be installed in the penthouse equipment room when an MATV or SMATV system is used. When a CATV source is used for these facilities, the headend shall be installed in the

communications head end equipment room. For stand alone clinics, the headend shall be installed in one of the communications rooms.

10-8.1.2 Headend Equipment. All equipment required to acquire, process, filter and condition the TV signals for distribution, shall be provided. This shall include antennas, converters, amplifiers, filters, combiners, test ports, attenuators, and any other equipment required by the TV signal source selected. Provisions for an interface, if required by the using service, to the hospital patient information system shall be provided. For Hospitals and Medical Centers the system will provide for computer control of individual television sets, on demand viewing from individual television sets in patient rooms as well as on demand internet service from individual television sets patient rooms. The system will be capable of providing billing information for each on demand service chosen by a patient.

10-8.1.3 Distribution System. The distribution system shall consist of coaxial cable, amplifiers, splitters, directional couplers, multi-taps, and outlets to provide radio frequency TV signals to the GFGI television sets throughout the facility. The amplifiers shall be installed in communications rooms throughout the facility. Multi-taps are typically installed along the outside edge of the cable tray to facilitate distribution to the outlets.

10-8.2 **Television Outlet Location**. Television outlets will be provided in the following manner in the following types of rooms.

10-8.2.1 Nonpatient Rooms. A television outlet will be provided in each day room, patient lounge, waiting room, classroom, conference room, auditorium, staff lounge, staff sleep room, group therapy, play therapy, administrative office in the command suite and in each department chiefs office. In rooms larger than 14 net square meters (NSM) the outlet(s) will be located 0.3 meters below the ceiling. For smaller rooms, the outlet will be located 0.45 meters AFF allowing ready access for manual control. In conference rooms, lounges and classrooms, larger than 14 NSM, the television outlet may be connected through a coaxial switch. The coaxial switch will be required if portable video programming sources are to be used by the facility and will be mounted 1.2 meters AFF and will include an input jack for a video cassette recorder. Switch will be two position type marked for central TV and Video Program Source (VPS) selections. The TV outlets will be mounted per using service requirements and a remote control unit will be provided.

10-8.2.2 Patient Rooms. Television outlets will be located on the wall opposite the bed and out of the circulation path. Remote channel selection from the nurse call pillow speaker or patient bedrail system will be provided.

10-8.2.3 Psychiatric Patient Rooms. Television outlets will not be provided in psychiatric seclusion rooms. The using service shall determine the requirement for television outlets in all other psychiatric patient rooms.

10-8.3 **Television Outlet Configurations**. Television outlets will be configured as follows:

10-8.3.1 Standard Wall TV Outlets. Outlets will consist of a 100 millimeter square box with a metal barrier and a 2-gang flush metal device plate. The device plate will have a built in 75 ohm female type F coaxial connector on one side, and a NEMA 5-20R AC power receptacle on the other side.

10-8.3.2 Patient Room TV Outlets. Outlets will consist of a 100 by 150-mm 3-gang box with a metal barrier and a 3-gang flush metal device plate. The device plate will have a built-in 75 ohm female type F coaxial cable connector on one side, a bushed opening in the middle section to receive the television control cable, and a NEMA 5-20R, AC power receptacle on the other side. The audio output of the television receiver and the TV control cable will be connected to the associated nurse call bedside station by a shielded cable in a 20 mm conduit.

10-9 **RADIO FREQUENCY DISTRIBUTION SYSTEM**. A Radio Frequency Distribution System shall be provided to receive and distribute both simplex and duplex radio frequency communications throughout the facility. The system will be capable of receiving and distributing radio frequencies between 150 MHz and 5800 MHz. The signal sources may be either external or internal to the facility. The exact frequencies to be used shall be coordinated with the using service. The system will be capable of supporting IEE 802.X wireless network communications, radio page communications, trunked radio Communications, cellular communications and RF tracking communications simultaneously.

10-10 **NURSE CALL TONE VISUAL** (**NCTV**). Tone/visual nurse call systems provide simultaneous light and tone signaling of patient and staff calls for emergency assistance. NCTV systems are typically installed in stand alone clinics and in clinics in hospitals and medical centers as directed by the using service. TVNC Systems shall comply with UL 1069 and be UL 1069 listed.

10-10.1 **Station Location**. Provide emergency call stations in each patient toilet room, public toilet inside the clinic, patient shower, recovery room, hydrotherapy/whirlpool tub area, clinic treatment room, specimen drawing, blood donor area, selected PT treatment cubicles, clinic procedure room, pulmonary function lab, immunization room, dialysis rooms, Treadmill Room, Allergy Injection Room, EEG Testing Room, radioisotope lab, patient dressing areas (EG/Radiology/PT etc.) and other treatment areas in which a patient might be left alone.

10-10.2 **Electrical Power**. Tone visual systems will be on the critical branch.

10-10.3 **System Components and Operations**. The system will be composed of the following components and operate in the manner described.

10-10.3.1 Emergency Call Station. An emergency call cord station will be provided adjacent to the patients head in recovery areas and treatment rooms, beside each toilet, adjacent to each whirlpool, beside the chair in each specimen donor area and above the shower head. Waterproof stations will be provided in showers and at whirlpool. An emergency nurse call is initiated by pulling a cord or pushing a button at an emergency nurse call push button station. This will cause the following events to occur until the call is cancelled at the originating station.

10-10.3.2 Room Dome Light. Dome light with chime outside room or cubicle will illuminate and a chime will sound. The dome light color will be coordinated with all other systems to provide a unique annunciation.

10-10.3.3 Zone Dome Light. Zone dome light with chime at intersection of corridor where the patient care room is located will illuminate with a light and sound an audible tone also. The color and audible tone pattern of the light shall be coordinated with the using service to provide a unique annunciation identical to that provided by the dome lights.

10-10.3.4 Annunciator Panel. The wall mounted annunciator panel display at the nearest nursing station or reception desk will illuminate and indicate the call origination point and sound an intermittent signal. The light and signal can only be canceled at the call originating station. The capability to silence the intermittent audible signal shall be provided at the annunciator panel. This will only silence the audible tone of the current call on the system. The visual signal shall remain until canceled at the originating station. The audible signal silence capability shall automatically reset and generate an audible signal upon receiving any new calls. Swing capability shall be provided between clinics when required by the using service.

10-10.3.5 Central Equipment. Central equipment panel will be located in a communications room nearest the area served.

10-11 **NURSE CALL AUDIOVISUAL(NCAV) SYSTEMS**. Communication of patient and staff calls for assistance will be provided from patient care locations through combinations of tone and light signals, full duplex intercom, digital display, and radio page. All NCAV system shall comply with UL 1069. The system shall utilize an independent, dedicate industry standard local area network with industry standard protocols, equipment and cabling.

10-11.1 **NCAV System locations**. NCAV systems are typically provided in inpatient wards and emergency rooms. Dedicated NCAV networks allow each patient care unit to operate from a local master station or transfer all nurse call functions to any other master station on the network. Prime NCAV capabilities include the following:

10-11.1.1 NCAV System Features. NCAV system networks will have the same basic feature package for standardization and to simplify maintenance problems. Features that are not required on a particular patient care unit will not be activated on the system installed in the unit.

10-11.1.2 Call Annunciation. Light, tone, master station display and alphanumeric radio page annunciation of patient and staff calls for assistance will be identified by classification, priority and origination point. Annunciation is simultaneously provided on various AVNC equipment devices and or directly to the assigned Nursing Staff via radio page to assure an appropriate and timely staff response over the most direct route to the call origination point.

10-11.1.3 Hands Free Operation. Hands-free voice intercom from patient care areas and staff work stations to the master station serving the unit shall be provided once a call is established.

10-11.1.4 Device Alarms. The NCAV system shall have the capability to transmit the signaling of alarms from an attached medical device such as an IV pump.

10-11.1.5 Television Control. The nurse call patient station shall provide for remote control and sound audio reception from patient TV set that is mounted on the patient room footwall or ceiling.

10-11.1.6 Lighting Control. The patient station pillow speaker or bed rail system shall provide control of the over bed reading and general lights.

10-11.1.7 Call Statistics. If required by the Using Service, the system shall maintain a data base of all call data and provide for the viewing and printing of call data on a work station and generation of statistical management reports of operating statistics including call type, call volume and call response time data.

10-11.1.8 Access Control Interface. If required by the Using Service, an interface with the access control system to provide annunciation on the local nurse call system if there is an attempt to make an unauthorized entry/exit from the unit shall be provided. This particularly applies to the pediatric and psychiatric nursing units, nursery, and surgical suite.

10-11.1.9 Telephone System Interface. If required by the Using Service, interconnection with the telephone system to provide for remote answering of patient nurse calls by use of any telephone in the facility.

10-11.1.10 Patient Information Interface. Provisions shall be provided, if required by the using service, to interface to the facility information system hospital patient information system.

10-11.2 **Station Locations**. Local master stations will be provided on each inpatient nursing unit, labor and delivery suite, surgical suite, surgical recovery, nursery, and emergency department. Master stations will also be provided, as required by the using service, in hemodialysis unit, cystoscopy suite, cardiac catheterization suite, Oral Surgery Clinic, and radiology special procedure (Angiography, CT Scan, MRI, Nuclear Medicine) suites and other areas as required by the using service.

10-11.3 **Electrical Power**. NCAV systems will be on the critical branch. All separately powered equipment such as monitors shall have separate uninterruptable power supplies.

10-11.4 **System components**. The following paragraphs describe the many components that comprise the NCAV system.

10-11.4.1 Patient Station Locations. Patient station locations will be as follows:

ROOM TYPE	MOBILIZATION BEDROOMS	NON-MOBILIZATION BEDROOMS
1 Bedroom:	1 Dual Bed Patient Station	1 Single Bed Patient Station
2 Bedroom:	1 Single Bed Patient Station & 1 Dual Bed Patient Station	1 Dual Bed Patient Station
4 Bedroom:	On each of two walls: Install 1 Single Bed Patient Station & 1 Dual Bed Patient Station.	On each of two Walls: Install 1 Dual Bed Patient Station.

In areas served by an NCAV system a single patient station will also be located in each recovery room bed module, OR patient prep/hold bed module, psychiatric bedroom (except isolation room) treatment rooms and labor/birthing room.

10-11.4.2 Cord Sets. A minimum of one cord set with entertainment controls, pillow speaker and lighting controls will be provided per patient station. The Using Service will determine the number and types of cord sets to be provided for each facility. Psychiatric patient bedrooms will be provided with push buttons in lieu of pillow/speaker controls.

10-11.4.3 Psychiatric Seclusion Rooms. Audio patient stations will consist of a speaker and microphone and will be mounted in the seclusion room ceiling. All components will be tamperproof.

10-11.4.4 Psychiatric Push Button Stations. Psychiatric push button stations will be provided in each seclusion room and will be provided in lieu of emergency call cords at all psychiatric toilet, shower and tub fixtures. All components will be tamperproof.

10-11.4.5 Psychiatric Key Switch. Psychiatric key switches will be provided outside the seclusion room door. This switch will activate the emergency call switch inside the seclusion room.

10-11.4.6 Emergency Pull Cord Stations. Emergency pull cord stations will be provided in each public toilet, patient toilet, shower, tub, and at each CCU and ICU toilet/lavatory location, except in psychiatric patient areas.

10-11.4.7 Emergency Push Button Stations. Emergency push button stations will be provided at each nursery intensive, continuing care, and isolation bassinet location; in each normal, admission, and observation nursery; and each parent feeding space.

10-11.4.8 O R Stations**.** Staff Stations with an emergency call button will be provided in each operating room, cystoscopy room, cardiac catheterization, Angiography procedure room and nursery procedure room. Two emergency call stations will be provided in the delivery and birthing room, one to support the mother and one to support infant resuscitation.

10-11.4.9 Auxiliary Medical Device Alarm Jack. Auxiliary medical device alarm jack will be provided on each patient station or on a separate panel adjacent to each bed, one per bed, except in CCU and ICU. Two, one on each side of the bed, will be provided in CCU and ICU.

10-11.4.10 Duty Stations. Duty stations provide an audio intercom capability plus visual and audible annunciation of calls on the system. Duty stations will be provided in the staff lounges, patient/prep hold, clean core, decontamination, equipment cleanup and storage, and anesthesia clean and soiled workrooms; linen, equipment, and supply storage rooms; trash rooms; treatment rooms; nourishment pantry; mediprep; staff work rooms; tub/shower rooms; and nurseries.

10-11.4.11 Staff Stations. Staff stations provide an audio intercom capability and will be provided in nurse, NCOIC, and ward master offices; dayrooms; conference, waiting, interview, pediatric play, operating, delivery, emergency procedure and trauma, cystoscopy, cardiac catheterization, and Angiography rooms; isolation and seclusion room anterooms; and nursery parent teaching/feeding and procedure rooms.

10-11.4.12 Dome Lights. Dome lights without a tone device will be provided outside the entrance to each room which has a patient station, psychiatric push button station, emergency pullcord, emergency push button, and elbow switch for emergency calls.

10-11.4.13 Zone Dome Lights. Zone dome lights will be provided at corridor intersections to direct traffic to the call origination point.

10-11.4.14 Central Equipment Panel**s**. Central equipment panels will be located in communications rooms nearest the area served.

10-11.4.15 Central Printer. Central printer, if required by the Using Service, will be located as directed by the using service.

10-11.4.16 Patient Bed Devices. The Designer shall coordinate with the using service to determine if beds with integral devices are to be provided. The appropriate connections, coordinated with the equipment shall be provided for connection of Nurse call and telephone system to the bed equipment.

10-11.5 **System features**.

10-11.5.1 Network Operation Modes. Each equipped unit will be an operating zone of the network of a floor level network. Operating zones and network modes will function as follows:

10-11.5.2 Operating Zone Mod**e**. Each unit can operate as an independent zone with all calls from within the unit routed to the local zone master station in the unit. When in operating zone mode, the local zone master station has full dedicated use of all system features and intercom channel. No system busy signals will be allowed.

10-11.5.3 Network Mode. All functions and programmed patient data from any local zone master station can be captured by and combined with the functions and patient

data of any other master station in the network. Any one master station can handle all calls from any combination of operating zones or an entire network.

10-11.6 **Call Types**. The following are the types of calls signaled.

10-11.6.1 Patient Call. Patient call for routine or priority assistance from a patient bed.

10-11.6.2 Patient Call Cord Set Disconnect. Patient call cord set has been disconnected from the patient bedside station (will signal an emergency call).

10-11.6.3 Emergency Patient or Staff Call. Patient or staff call for emergency assistance from any patient or emergency call station.

10-11.6.4 Medical Device Alarm. Alarm signal from a patient bedroom indicating that an attached medical device needs service.

10-11.6.5 Staff Intercom Call. Staff intercom call from a staff or duty station location.

10-11.6.6 Reminder Call. Master station attendant call/signal to dispatch and remind staff that assistance is needed at a patient location as a result of a patient or staff call.

10-11.7 **Tone and Light Call Signal**.

10-11.7.1 Call Annunciation. Each call will annunciate throughout a unit by various combinations of illuminated lights and tones.

10-11.7.2 Annunciator Lights. Light colors, with steady or flashing illumination, will allow adequate distinction between call types and priorities.

10-11.7.3 Tone Annunciation. Calls on the NCAV system will cause tone signals will sound at the master, and duty stations only. Tone signals will sound at different intermittent pulse rates to allow adequate distinction between call types and priorities. Code blue calls will cause a tone signal on the central code blue annunciation panel.

10-11.7.4 Annunciation Coordination. Tone and light signals for each call type and priority will be consistent for all tone/visual and NCAV systems.

10-11.8 **Call Priorities**.

10-11.8.1 Call Prioritization. Processing of calls will be sequenced in a 4 level priority rank order, from a high of number 1 to a low of number 4, as listed below.

Priority Number	Call Category
1	Code Blue, Infant Code Blue, Infant Security Alarm, Wandering Patient
2	Emergency, Bed Exit, Failure Alarm, Emergency Medical Device Alarm

3	Priority, Patient Priority, Cord or Bed Disconnect
4	Routine, Routine Patient, Routine Medical Device, voice Intercom

10-11.8.2 Multiple Call Priorities. When more than one call is present on the system at any one time, the highest priority call will take precedence.

10-11.9 **Radio Page Capability**. NCAV system networks will be provided radio page capability so that calls registered on a network can be relayed to radio pagers carried by staff. Radio pages can also be originated from master stations and the telephone attendant consoles. NCAV radio page system may be combined with the wide area radio page system.

10-11.9.1 Message Types. Pagers will be able to receive the following types of messages:

10-11.9.2 Priority Alert Tones. At least three distinct alert tones to indicate the priority of the digital display or voice message being paged.

10-11.9.3 Alpha Numeric Message. An alphanumeric digital display message, including room/bed number and type of call.

10-11.9.4 Pager Assignment. Duty assignment data will be programmable from any master station. The data will correlate the address number of the pager assigned to a staff member with their duty assignment by room/bed, level of care and work shift.

10-11.9.5 Call Transfer To Pager. Any patient, staff or medical device service call from a patient care location can be relayed directly to the individual or group of pagers carried by the staff assigned to the call origination point and level of care on each shift. The system will automatically perform this direct relay function to the appropriate pager by cross-referencing duty assignment and absence indication data with pager assignment and address data.

10-11.9.6 Call Transfer Function. Call relay function can be initiated in any one of the following three ways:

10-11.9.7 Attended, Semiautomatic Mode. When calls are being handled at a master station the attendant can relay a call to the appropriate pager by activating a radio page function key on the station keyboard while the call is still registered on the system.

10-11.9.8 Unattended, Automatic Mode. When a master station is unattended, the station can be switched to an automatic radio page mode where by all calls coming to the master station will automatically be relayed to the appropriate pagers.

10-11.9.9 Preprogrammed, Automatic Mode. Specific call types can be programmed for automatic relay to the appropriate pager even if the master station that normally handles the call is unattended. This will include emergency and auxiliary

medical alarm service calls. Additionally, each patient station can be individually programmed for patient priority call status whereby all patient calls will be automatically relayed to the appropriate pager.

10-11.9.10 Page Origination. A radio page can be originated from any master station. A tone alert and alphanumeric digital display message can be originated by use of the station keyboard. The message may be either a preprogrammed message or a free text message. The page can be routed via duty assignments by keying in the room/bed number or directly to an individual or group by keying in their pager address number.

10-11.9.11 Master Stations. Master stations that have transferred control of the operational zone to another master station will retain the capability to originate radio pages.

10-11.10 **Code Blue**. Code Blue is a generic phrase which is used to indicate a critical situation brought on by a cardiac arrest or similar type of immediate life threatening event. Depending on the type of health care facility and the using service criteria there can be a number of variations on Code Blue which identify different types of patients to which the code applies. The number and type of signals shall be determined by the using service. These may include, but not limited to, a code for adult patients, pediatric patients, and infants each of which will have a separate label. For the purposes of this document all such calls shall be referred to as Code Blue. The NCAV shall provide for all types of Code Blue calls to be implemented by the using service in the facility. All Code Blue calls shall share the highest priority on the NCAV system.

10-11.10.1 Code Blue Call Locations. The using military service shall decide where Code Blue signaling devices are required. It is strongly recommended that Code Blue signaling be provided in all areas covered by the NCAV system. A neonatal code signaling system is highly recommended in all baby care areas such as LDRP rooms and the nursery. A pediatrics code signaling system is highly recommended in the pediatrics ward and the emergency department. It is also recommended that code buttons be installed as separate, stand alone buttons in a single gang faceplate. Code Blue stations should be installed on each side of the patient service console to facilitate easy access by the attending staff. The following locations are strongly recommended for Code Blue stations: each inpatient bed; each OR; each delivery room; each cystocopy room; each bronchospy room; each oral surgery operatory; each LDRP room; each nursery; each baby care area; each emergency exam treatment room bed; each trauma room bed; each pre-op and post-op surgery patient hold cubicle; each inpatient exam treatment room; each stress test/treadmill room; each blood draw room; renal dialysis room; each immunization room; each x-ray room; each MRI room; each CT Scan room; each angiography room; each cardiac cath. room and each chemotherapy room.

10-11.10.2 Code Blue system Operation. The system shall be capable of activating the NCAV radio page interface in the event of a Code Blue call. The system shall transmit to the radio page encoder the type of call and the location by room and bed number in the facility. The radio page shall be sent to a specific group of pagers carried by the response team. The system shall also send the type of code call, room and bed number to the NCAV Code Blue annunciator panel which shall display all active Code

Blue Calls on the system. The Code Blue annunciator panel(s) shall be in a location which is staffed 24 hours a day such as the main reception desk, information desk or emergency room nurses station. The NCAV system shall also annunciate Code Blue calls with unique audible and visual signals on the Master Stations, duty stations, unique color and flash sequence on NCAV dome lights.

10-11.11 **Service Dispatch Reminder**. If during a patient call the master station attendant determines that a patient needs staff assistance the attendant can signal this need. If service is not rendered within a specified time period, the system alerts the attendant by appropriate signaling at the master station.

10-11.12 **Patient Station Privacy Mode**. Any patient station can be switched to operate in a privacy mode. When a patient station is in the privacy mode, the attendant at the master station cannot monitor sound from the patient room. While in this privacy mode, the patient can still receive or originate a call. When the call is complete, the patient station will return to the privacy mode.

10-11.13 **Master Station Features**. Master stations shall be PC based with large touch screen flat panel color monitors unless otherwise directed. Master stations will include the following features in addition to those specified above:

10-11.13.1 Call Sequencing. Calls can be sequenced for answer in accordance with call priority rank order and time of placement. This normal sequence can be bypassed and calls answered in any order.

10-11.13.2 Priority Programming. Capability to program and review priority rating of patient station.

10-11.13.3 Voice Intercom Calls. Place full duplex voice intercom calls to patient stations, staff and duty stations by touching the appropriate control on the touch screen monitor or dialing the stations number. If the called patient station is in the privacy mode, the patient has to activate the nurse call push button/pad before answering the call.

10-11.13.4 Audio Monitoring. Audio monitor of any one patient station that is not in the privacy mode.

10-11.13.5 Handsfree Mode. Calls are placed and answered in a handsfree mode. A handset is provided privacy when placing or answering calls.

10-11.13.6 Call Display. Capability to display a minimum of 3 incoming calls, holding all other calls in memory until answered. Patient data shall be displayed on the monitor when a room or call is selected.

10-11.13.7 Feature Programming. Capabilities to initialize review and update all programmable system features, variable data, radio pager duty assignment, and patient data.

10-11.14 **Patient Station Controls**. Patient entertainment and light control:

10-11.14.1 Light Controls. Reading and general lights can be controlled by activating light control switches on the cord set connected to the patient station, except in psychiatric patient bedrooms and seclusion rooms.

10-11.14.2 Television Controls. In patient bedrooms where the TV set is mounted on the footwall or ceiling, the patient can also control/listen to TV channels through use of a pillow speaker type cord set connected to the patient station. TV controls include TV set on/off, channel selection and volume.

10-11.14.3 Alternate Cord Sets Types. A push button or pressure pad cord set can be used in conjunction with a pillow speaker/light control cord set.

10-11.14.4 Pressure Pad Cord Sets. It is also possible to use a dual pressure pad cord set to control two functions, nurse call and footwall TV set control, or nurse call one light control. It is not possible to use a push button or a geriatric pressure pad cord set to control TV volume on footwall mounted TV sets.

10-11.14.5 Cord Set Holder. A wall bracket will be provided to hold the cord sets when not in use.

10-11.15 **Operational Statistics Printer**. Printout of operational statistics. A printer, if required by the Using Service, will be located in the central communications room. The system shall be capable of providing printouts of real time call data by room and bed. This data shall include the time each call is placed, answered at the master station, set on service reminder, and canceled.

10-11.16 **Access Control System Interface**. Remote access control alarm: By interfacing the nurse call system with the access control system, it is possible to locally annunciate any unauthorized entry/exit from the pediatric and psychiatric nursing unit, surgery, mother-baby unit and the nursery.

10-11.17 **Telephone System Remote Answer Interface**. An interface between the nurse call system and the telephone system, if required by the using service, shall be provided. The interface shall allow the use of any telephone on the unit to remotely answer any call from a patient station, staff or duty station when the nurse call master station is unattended.

10-12 PUBLIC ADDRESS (PA) AND PROGRAM DISTRIBUTION SYSTEM.

10-12.1 System Components. The system will consist of the following components.

10-12.2 **Headend Equipment**. The headend will contain the following equipment:

10-12.2.1 Background Music Sources. Compact disc player/changer shall be provided if desired by the using service to supply background music to the system.

10-12.2.2 Auxiliary Inputs. Rack space and preamplifier input ports for two auxiliary inputs shall be furnished to support Using Service provided devices.

10-12.2.3 Preamplifiers and Power Amplifiers. Preamplifiers and power amplifiers shall be provided.

10-12.2.4 Monitor Panel and Selector Switches. Monitor panel with selector switch and speaker to check each zone output shall be provided.

10-12.2.5 Voice Input and Zone Selection. Microphone, zone selector switch and telephone interface module for paging shall be provided. The number of telephone trunk or subscriber lines provided will be based on the system configuration. One trunk or subscriber line per zone shall be provided. Telephone system interface equipment shall be provided as part of the PA system. Control functions such as call answer, tone announcement before the page, and automatic preset time-out will be accomplished by the telephone interface module.

10-12.2.6 Input Selection Switch. Input selection switches for connecting program inputs to the distribution system.

10-12.3 **Loudspeaker System**. Low power speakers will be used to provide uniform sound distribution at low volume levels. For maximum coverage, corridor speakers will be spaced at a maximum of twice the ceiling height apart. Speakers located in individual rooms will be provided with separate volume controls. Paging speakers in designated areas such as a pediatrics clinic will be provided with a volume control and bypass relay for override during paging. Table 10-3 provides guidance for speaker functions to be provided in each area.

10-12.4 **System Configuration**. The system shall be configured in accordance with the following.

10-12.4.1 All Call. An all zone paging capability, which shall have priority over all other paging will be provided in every facility. All-call may be accessed via a microphone in the central communication room or via telephone. The microphone access has priority over the telephone access.

10-12.4.2 Wide Area Zone. Each hospital will be zoned by functional areas - nursing tower, outpatient clinics, energy plant, and ancillary areas. Wide area paging will have priority over all local paging. Microphone access has priority over the telephone access. These zones may be accessed via a microphone in the central communication room or via telephone.

10-12.4.3 Local Zones. For each ancillary or administrative department or outpatient clinic where patients are seen for diagnosis or treatment, such as radiology or physical therapy, paging zones will be established for both patient and staff areas. Local zones will be accessed using the telephone system. In ancillary areas which only provide support, such as central material services, only a staff zone will exist. The microphone access for the areas will be at the department secretary or NCOIC office. Local zone paging may be overridden by wide area zone or all zone paging. A music volume

control with bypass relay for paging will be provided at the same location as the microphone.

10-12.4.4 Music Only Speakers. Music only speakers will be provided at locations where staff or patient paging is not required but music is desired. A volume control will be provided in each music only area.

10-12.4.5 Functional Area Zones. See table 10-3 for zones provided in functional areas.

10-12.4.6 Speaker Locations. Speakers will never be provided in the following: private or multi-occupancy offices; recovery rooms; exam rooms; libraries; patient bedrooms and staff sleeping rooms.

10-12.4.7 Sound Reinforcement Systems. Local sound systems, to include microphones, speakers, and amplifiers, not connected to the program distribution system, will be provided in chapels, auditoriums, and large conference rooms.

10-12.4.8 Medical/Dental Clinic Zoning. A separate zone for medical and a separate zone for dental will be provided in combined Medical Dental clinics. An all call for the entire facility will be maintained.

10-12.4.9 Microphone Quantities. The installation of microphones will be limited. The using Service will provide guidance on the number and location of microphone stations. Telephone system input is the preferred method.

10-13 RADIO PAGING SYSTEMS.

10-13.1 **Radio Paging**. One ultra high frequency (UHF) paging systems will be provided for 100 percent coverage within the health facility. The recommended method is to furnish the system as part of the construction contract. Leasing radio paging service is an option from a local provider. An economic analyses shall be performed to determine the most advantageous solution. A written agreement assuring that any leased service provider will provide priority service for medical facility generated pages will be required. A system to ensure 100% coverage inside the medical facility will need to be provided if a leased service provider is selected.

10-13.2 **Pager Distribution**. Pagers will be provided for all professional and support personnel who either frequently work away from their primary areas.

10-13.3 **System Function**. The system will utilize tone and vibration alert paging receivers that display an alpha numeric message. Each pager will be accessible by dialing a discrete set of digits via the telephone system. Access will also be possible through a central control console within the health facility or through the audio visual nurse call system. Facility design shall include space in penthouse area, AC power and conduit for control and coaxial cables. The radio page system shall interface with the nurse call system if required by the using service.

10-13.4 **Emergency Response Team Pagers**. Pagers assigned to members of the code and other emergency response teams will provide at least 3 separate and distinct annunciations; one for routine calls and one for emergency calls. These pagers will have two separate access codes, one for routine and one for group alerting. The group alerting code will signal all units simultaneously.

10-13.5 **Antennae Type and Mounting**. Antenna type and mounting height will be selected to provide complete facility coverage. Conduit must be provided from the encoder to the transmitter location and from there to the antenna.

10-13.6 **Power Requirements**. All radio paging equipment will be connected to the life safety branch of the emergency power system and rated for continuous duty.

10-14 **EMERGENCY MEDICAL SERVICE** (**EMS**) **COMMUNICATIONS**. The EMS system consists primarily of GFGI radio equipment which is used for voice and telemetry communications with military and civilian ground and air ambulances. Multiple radios are used at each location and the basic task for the designer is to provide site support for the GFGI equipment. Remote control units for the radio transceivers are included with the radios and these will usually be installed in ambulance dispatch or in the emergency room nurse's station for receiving voice and telemetry. The radio transceivers are normally installed in the penthouse equipment room although some transceivers have no remote control unit and will be installed in ambulance dispatch. Information must be obtained on the GFGI equipment to provide the required site support. Additional service specific requirements are included in reference Naval Installations EMS installations shall comply with BUMED Instruction 6320.80(emergency medical system).

10-14.1 **Electrical Power**. Power will be provided for all radios and remote control units from the life safety branch of the emergency system when available.

10-14.2 **Empty Conduit and Boxes**. Junction boxes and empty conduits will be provided with pull wires to install cables. Provide conduits from the penthouse to the antennas mounted on the roof and when required, conduits for coax and control cables from ambulance dispatch to the penthouse equipment.

10-14.3 **Structural Support**. Structural support and sufficient mounting space will be provided for the antennas.

10-15 **PHYSIOLOGICAL MONITORING**. An empty conduit system with pull wires will be provided for installation of GFGI equipment and cable for the monitoring system. All equipment including monitors, computers, and printers will be connected to the critical branch of the emergency power system. A GFGI uninterruptible power supply (UPS) will be provided by the using Service.

10-15.1 **Cardio-Pulmonary Respiratory Monitoring**. Data entry points will be monitored by a central computer. A minimum of one 12 CM square back box and one 25mm (1 inch) conduit with pull wires will be provided from each data entry point to the communication system cable tray. Conduits with pull wire will be provided from the

central physiological monitor computer room to the communication system cable tray. As a minimum data entry/monitor points will be provided as follows:

10-15.1.1 Emergency Room. Each trauma room, treatment room, treatment cubicle, and the nurses station. At the nurses station provide conduit to both the printer and monitor locations.

10-15.1.2 Surgical Suite. Each operating room, with outlet located in ceiling service console; Each recovery bed including the isolation rooms; recovery area nurses station; and the anesthesia work room. At the recovery area nurses station provide conduit to both the printer and monitor locations.

10-15.1.3 Urology. Each cystoscopy room.

10-15.1.4 ICU/CCU. Each bed and nurses station. At the nurses station provide conduit to both the printer and all monitor locations.

10-15.1.5 Step-down Units. At the nurses station provide conduit to both the printer and all monitor locations.

10-15.1.6 Labor And Delivery. Each delivery room, with outlet located in ceiling service console; Each labor room; each recovery bed, and nurses station. At the nurses station provide conduit to both the printer and all monitor locations.

10-15.2 **Fetal Monitoring**. A conduit with pull wire will be provided from each delivery room, labor room, stress test room, exam/prep room and birthing room to a pull box above the ceiling at the labor and delivery nurses station. A minimum of one conduit with pull wire will be provided from the pull box to the nurse station for the monitors.

10-15.3 **Neonatal Monitoring**. A conduit with pull wire will be provided from each intensive and continuing care bassinet location, LDR, LDRP and each isolation room to a pull box above the ceiling at the nursery nurses station.

10-15.4 **Anesthesia And Respiratory Gas Analysis System**. Conduit with pull wire will be provided from each operating room ceiling column, from 25 percent of the patient service consoles in the surgical suite recovery area, to include the isolation rooms; each cyctoscopy room at the head of the table; each delivery room ceiling column, and one delivery recovery bed patient service console. Conduits with pull wires will be provided to the anesthesia workroom where the analyzer and central processing unit are to be located. Conduit will be provided to the anesthesia office suite and the blood gas lab for printer or cathode ray tube units.

10-16 **SPECIAL MONITORING EQUIPMENT**. Monitor panels for hospitals and Medical Centers will be provided in a 24 hour staffed location to monitor the operation of critical hospital systems and equipment per NFPA 70. If an Energy Monitoring System is furnished for the facility, the alarm points may be made part of that system and a separate monitor need not be installed. The exceptions are medical gas and the emergency generator monitors, which must be a dedicated system.

10-16.1 **Refrigerator Unit**. A signal circuit will be provided from the blood bank, food service, autopsy, allergy injection, immunization and pharmaceutical (pharmacy and logistics) units to indicate loss of electric power or excessive temperature or each refrigerator.

10-16.2 **Medical Gas Alarms**. Alarms for each piped medical gas system will be provided. (See section 8).

10-16.3 **Power System Monitor/Annunciator**. Key functions of normal and emergency electrical power system will be monitored and will include status indicators and alarms as listed in NFPA 70 and NFPA 99.

10-16.4 **Stand Alone Clinic Refrigerator Alarms**. Refrigerator alarms for stand alone clinics shall be connected to a remote staffed location. Connection of the alarms to an Energy Monitoring system, if available, will accomplish this requirement.

10-17 **ELECTRONIC SECURITY SYSTEMS**. Security within a Medical Treatment Facility may be accomplished with an intrusion detection system, door access systems, infant protection system and CCTV surveillance or a combination of the above.

10-17.1 **Intrusion Detection Systems (IDS)**. Empty conduit raceways and outlet boxes with blank covers will be provided for the future GFGI installation of an IDS system. The site preparation for this system will include allocation of space in a protected area for a control unit, monitor station and signal processing equipment as well as remote sensors. Intrusion detection system locations and sensor types to be provided for are as follows:

Location	Balanced Magnetic Switch	Ultrasonic Motion Detector	Duress Alarms
Inpatient and outpatient Pharmacy	X	X	
Inpatient and Outpatient Pharmacy dispensing Window(s)	X	X	X
Emergency Department			X
Pharmacy Vault	X	X	
Cashier office	X	X	X
Logistics vault	X	X	
Logistics warehouse	X	X	
Silver recovery central Collection point	X	X	
Mental Health			X

The above table is provided for general guidance. Specific design shall be in accordance with the using Service guidance.

A magnetic switch shall be placed on each door or window that could provide access. The motion detector shall cover the entire area. Video monitoring and recording will be activated by

the intrusion detection and duress alarms (See paragraph CCTV surveillance). Intrusion Detection system design will follow the established industry guidelines.

10-17.2 **CCTV Surveillance**. Provisions will be made for GFGI CCTV surveillance equipment. Conduits with pull wires, outlet boxes, and electrical power will be provided for the following suggested locations: cashier office, cashiers in food service and installation exchange, vaults, stairwell exits on pediatric and psychiatric nursing units and nursery, computer room, emergency and acute minor illness waiting and reception areas, corridors connecting buildings, pharmacy dispensing windows, building entrances and exists, elevator lobbies, loading docks, parking lots, and ground floor mechanical rooms. The system will be designed such that a camera will be activated by an intrusion detection alarm or an attempt at unauthorized access at a card reader. Monitors will be located in a staffed location.

10-17.3 **Door Access Systems**. An electronic door access system will be provided where required by the using Service. The system will be complete and will include all monitor and control equipment and equipment to produce cards to discontinue access authorization for issued cards, maintain and provide a listing of current authorized access by individual, location, and time. An interface will be provided between the CCTV system and the Door Access System to initiate video monitoring and recording anytime these doors are opened unless an authorized access card has been read by the card reader. This is further defined in paragraph, "CCTV Surveillance." An electronic door access system will be provided at the following locations:

- Selected building entrances.
- Each exterior door to the 1st floor mechanical equipment rooms.
- Each storage room entrance door
- Each Pharmacy Door
- Each Pharmacy vault door
- Each computer room door
- Each cashier office door
- Each Psychiatric Nursing Unit entrance door

10-17.4 **Infant Protection System**. This system will provide a method where by any unauthorized individual who attempts to transport an infant through a protected doorway shall create an alarm condition. In an alarm condition the doorway shall be locked to prevent the individual and or infant from being able to leave. The system shall be supervised to detect any tampering or removal of a monitoring device. Any detected unauthorized tampering with or unauthorized removal of equipment shall generate an alarm condition.

10-18 **EMS RECORDER SYSTEM**. A multichannel recorder system will be provided as required by the using service in hospitals and medical centers. The system will include the following functions and features:

10-18.1 **EMS Recorder Function and Features**. The EMS recorder will typically be installed in the Ambulance dispatch area. The system will be used to record voice communications on selected telephone lines and all EMS radios. The telephone lines recorded shall include but not be limited to the Emergency room Nurses Station and the Ambulance Dispatch telephones. The actual lines to be recorded shall be determined by the using military service. Two way audio from each of the EMS radios shall be recorded. The recorder shall as a minimum have the following characteristics:

Record media shall have a minimum of 24 hours of recording capacity.

A minimum of 10 channels plus one channel which records time in hours, minutes and seconds for record retrieval.

A microprocessor based control system which provides both system control and diagnostics.

A rapid search system which enables fast retrieval of time dated information

Search and playback from digital memory while the system continues to record the prescribed channels.

10-18.2 **System Inputs and Mounting**. The system will accommodate multiple input impedances to allow recording from the varied media identified. The system shall be rack mounted in a free standing cabinet.

REFERENCES

10a. Americans with Disabilities Act and Architectural Barriers Act Accessibility Guidelines" United States Access Board, latest edition.

10b. NFPA 70, "National Electric Code"

10c. NFPA 99, "HealthCare Facilities"

10d. NFPA 101, "Safety to Life from fire in Buildings and Structures"

10e. ANSI/TIA/EIA 568, "Commercial Building Telecommunications Cabling Standard"

10f. ANSI/TIA/EIA 569, "Commercial Building Standard for Telecommunications Pathways and Spaces"

10g. ANSI/TIA/EIA 606, "Administration Standard for the Telecommunications Infrastructure of Commercial Buildings"

10h. ANSI/TIA/EIA 607, "Commercial Building Grounding and Bonding Requirements for Telecommunications"

10i ANSI/TIA/EIA 758, "Customer–Owned Outside Plant Telecommunications Cabling Standard"

10j MIL–HDBK-1012/3, “Telecommunications Premises Distribution Planning, Design and Estimating”
http://www.wbdg.org/ccb/NAVFAC/DMMHNAV/1012_3.pdf

Table 10-1

EMERGENCY POWER BRANCH ASSIGNMENT FOR COMMUNICATION SYSTEMS	
COMMUNICATIONS SYSTEMS	BRANCH ASSIGNMENT
TSS Telephone	Life Safety
Public Address and Program Distribution	Life Safety
Radio Paging	Life Safety
Physiological Monitoring	Critical
Emergency Medical Service (EMS) Radios	Life Safety
LAN Electronic Equipment **	Critical
Nurse Call	Critical
ELECTRONIC SECURITY	
IDS	Equipment
CCTV	Equipment
SPECIAL ALARM MONITORING EQUIPMENT	
Medical Gas	Critical
Blood Bank	Critical
Morgue Refrigerators	Equipment
Food Service Refrigerators	Equipment

** For the purposes of this document LAN electronic equipment does not include any individual computer workstations. Individual computer workstations will need to be addressed on a case by case basis with the using military service.

Table 10-2
CRITICAL CARE AREAS THAT REQUIRE EXECUTIVE BRIDGING FEATURE

Each Nurse's Station
Each Operating Room and control station
Emergency Room Reception / Nursing Station
Pharmacy: Intravenous (IV) Additive and Unit Dose
Pathology: Reception, Blood Bank, frozen section and Stat Lab
Radiology Reception
Cardiology Clinic Reception
Respiratory Therapy Blood Gas Lab
Each Delivery Room, suite and recovery room
Obstetrics/Gynecology Clinic Reception
Cardiac Cath
Angiograph Rooms
Obstetrical,Medical/ Surgical, OD and Pediatrician Sleep Rooms
Linear Accelerator Control Station
Magnetic Resonance Imagery Control Station
Contamination Control Area
Hyperbaric Medicine

Table 10-3.

PUBLIC ADDRESS AND PROGRAM DISTRIBUTION ZONES						
Area	Zone*	Page Only	Page & Music	Music Only	Location of Music Vol.Ctrl**	Microphone Location
Interdepartmental Corridor	All-Call		X		Head end	Central commo rm
NURSING UNITS SURGERY, OBSTETRICS:						
Corridor	All-Call	X			Head end	Central commo rm
Dayroom				X	Nurses Station	Not Applicable
Family Wait				X	Nurses Station	Not Applicable
Staff Lounge				X	Lounge	Not Applicable
Operating & delivery rooms				X	Each room	Not Applicable
Nursery	All-Call		X		Each room	Central commo rm
Snack bar, Vending area, Px, Barber shop	All-Call		X		Head end	Central commo rm
OUTPATIENT CLINICS (MEDICAL & DENTAL):						
Patient waiting, Toilets, and Corridors	Local-patient		X		Reception	Reception
Staff Corridors	Local-staff		X		Reception	Reception
Staff lounge	Local-staff		X		Lounge	Reception
Treatment room				X	Each tretmt rm	Not applicable
Dental treatment Rooms & areas				X	Each room or area	Not applicable
OCCUPATIONAL AND PHYSICAL THERAPY:						
Patient waiting & Toilets	Local-patient		X		Reception	Reception
Corridor	Local-staff		X		Reception	Reception
Hydrotherapy				X	Each room	Not applicable
Activities of daily Living				X	Suite	Not applicable
Exercise & rehab				X	Each room	Not applicable
Treatment cubicles				X	Each room	Not applicable
Staff lounge	Local-staff		X		Lounge	Reception
RADIOLOGY, RADIATION THERAPY, NUCLEAR MEDICINE						
Patient waiting, Corridors, toilet	Local-patient		X		Reception	Reception

Table 10-3.

PUBLIC ADDRESS AND PROGRAM DISTRIBUTION ZONES						
Area	Zone*	Page Only	Page & Music	Music Only	Location of Music Vol.Ctrl**	Microphone Location
(Mulltioccupancy) Diagnostic & therapy rooms				X	Each room	Not Applicable
Staff Corridors	Local-staff		X		Reception	Reception
Staff Lounge	Local-staff		X		Lounge	Reception
PATHOLOGY:						
Patient waiting and toilets	Local-patient		X		Reception	Reception
Blood drawing				X	Each room	Not Applicable
Laboratories except blood bank	Local-staff		X		Each room	Reception
Blood bank			X		Each room	Not Applicable
Corridors	Local-staff		X		Reception	Reception
Staff lounge	Local-staff		X		Lounge	Reception
FOOD SERVICE:						
Dining room	Local		X		Dept. Secretary	Dept. Secretary
Kitchen	Local		X		Dept. Secretary	Dept. Secretary
Staff lounge	Local		X		Lounge	Dept. Secretary
Corridors	Local		X		Dept. Secretary	Dept. Secretary
LOGISTICS:						
Warehouse	Local		X		Each area	Dept. Secretary
CP&D	Local		X		Each area	Dept. Secretary
Staff lounge	Local		X		Lounge	Dept. Secretary
Corridor	Local		X		Dept. Secretary	Dept. Secretary
ADMINISTRATIVE DEPARTMENTS:						
Corridors	All call		X		Local amplifier	Not applicable
CENTRAL MATERIAL SERVICES:						
Work areas	Local		X		Each room	Sec or NCOIC office
Corridors	Local		X		Sec or NCOIC office	Sec or NCOIC office

Table 10-3.

PUBLIC ADDRESS AND PROGRAM DISTRIBUTION ZONES						
Area	Zone*	Page Only	Page & Music	Music Only	Location of Music Vol.Ctrl**	Microphone Location
Staff lounge	Local		X		Each room	Sec or NCOIC office

The above table is provided for guidance only the actual configuration of the PA system will be coordinated with the using service.

** Volume control for music only. All page only and page & music speakers with a local volume control will have a bypass relay for paging.

*Areas indicated for all call and local staff zones will also be included in wide area zones in the facility.

SECTION 11

ACCESSIBILITY PROVISIONS FOR THE DISABLED

11-1 **GENERAL**. This section provides design guidance on the application of accessibility requirements. Facilities are required to be accessible to disabled persons and shall be designed and constructed or retrofitted in accordance with the Americans with Disabilities Act and Architectural Barriers Act Accessibility Guidelines (reference 11a). In general, all facilities worldwide which are open to the public, or to limited segments of the public, or which may be visited by the public in the conduct of normal business, shall be accessible to disabled persons.

11-2 **MILITARY EXCLUSIONS**. Facilities which are intended for the use of, or occupancy by, or staffed by only able-bodied military personnel need not be designed to be accessible by disabled persons; however, accessibility is recommended. The term "able-bodied military personnel" is defined as all active duty military personnel. Temporary facilities, such as troop aide stations and fleet hospital mobilization units used during military conflicts, need not be accessible.

11-3 **OVERSEAS FACILITIES**. DoD-funded facilities constructed overseas will be accessible. Facilities for which the United States contributes a portion of the construction cost but does not control design criteria (such as NATO-funded facilities) need not be accessible. Facilities being constructed by or for use by the United States under the laws, codes, rules, and regulations of another country need not be accessible. Facilities being leased by the United States in other countries should be accessible.

11-4 **TMA/PPMD COMPLIANCE REQUIREMENT**.

11-4.1 TMA/PPMD policy is that all spaces serving patients, staff, and visitors shall be designed to be accessible to the disabled. TMA/PPMD programs adequate net area to design all patient dressing rooms, patient bedrooms, and patient bedroom toilets as accessible spaces even though UFAS/ADAAG requires only 10 percent of these spaces to be accessible.

11-5 **VISUAL ALARMS**. Provide visual alarms in common use spaces and public use spaces as defined by and in accordance with the common use and public use criteria contained in the UFAS/ADAAG.

11-5.1 The design agent is responsible for interpretation of UFAS/ADAAG visual alarm location.

11-5.2 Visual alarms are not required in areas used only by employees as work areas. These areas are defined as individual offices and individual work stations), mechanical, electrical and telephone closets, janitor’s closets, and similar unoccupied spaces that are not common use areas nor assigned work areas. This may include other staff-only spaces within a facility.

REFERENCES

11a. “Americans with Disabilities Act and Architectural Barriers Act Accessibility Guidelines” United States Access Board, latest edition.

SECTION 12

FIRE PROTECTION

12-1 **GENERAL**. This section provides fire protection engineering policy and design guidance for all medical facilities including hospitals, medical centers, composite medical facilities, occupational health clinics, free-standing outpatient health and dental clinics, flight medicine clinics**,** and other facilities for inpatient, emergency and ambulatory care. This section also provides fire protection engineering policy and design guidance for medical support facilities such as, blood storage and medical warehouses, medical laboratories and medical research laboratories, and veterinary care facilities.

12-2 **CRITERIA**.

12-2.1 **Life Safety and Fire Protection Concepts**. The life safety concept and the fire protection concept shall be in accordance with NFPA 101 (reference 12a).

12-2.2 **Codes and Standards**. Except as modified herein, designs for facilities shall comply with the latest edition of UFC 3-600-01 reference 12b), the standards contained in the current National Fire Codes published by the National Fire Protection Association (NFPA), the International Building Code (IBC) published by the International Code Council (ICC) and the Joint Commission on Accreditation of Health Care Organizations (JCAHO) Manual (reference 12c) and National Institute of Standards and Technology (NIST) publications.

12-2.3 **Fire Safety Evaluation System (FSES)**. NFPA 101A (reference 12d) may be used to assess existing facilities and for design concept development of Life Safety Code upgrade projects at existing facilities. NFPA 101A (reference 12d) may be considered for semi-permanent and contingency facilities if approved by the appropriate Design Agent and TMA. NFPA 101A will not be used in lieu of prescriptive code criteria for the design of new permanent facilities.

12-2.4 **Criteria Deviation**. Where valid need exists and an alternate solution involving equivalent concepts and sound fire protection engineering are available, criteria deviation may be accepted after approval by TMA the Authority Having Jurisdiction (AHJ) as identified at UFC 3-600-01 in conjunction with TMA. Where deviation impacts compliance with JCAHO standards, coordination with and approval of Joint Commission Standards Group must be obtained prior to implementation.

12-3 **BUILDING CONSTRUCTION**. Building construction shall be as specified in UFC 3-600-01 (reference 12b).

12-3.1 **Type of Construction**. Type of Construction shall comply with UFC 3-600-01.
Exception: Medical facilities designed and constructed in accordance with the requirements of the Integrated Building System (IBS), with a walk-on platform which

provides access to the distribution zone (interstitial space), shall meet the criteria of NFPA 101 and NFPA 220.

12-3.2 **Building Height/Allowable Floor Area**. Building height and allowable floor area limitations shall be in accordance with UFC 3-600-01(reference 12b).

Exception: Medical facilities designed and constructed in accordance with the requirements of the Integrated Building System shall meet the fire and smoke compartmentation requirements and height limitations of NFPA 101.

12-3.3 **Existing Facilities**. Existing facilities shall be evaluated by a qualified fire protection engineer as defined by UFC 3-600-01 in order to determine the level of fire/life safety that is afforded the occupants.

12-3.3.1 Alterations and Renovations. To the extent possible, alteration, renovation, modernization and rehabilitation work of existing facilities shall comply with the requirements for NEW construction in accordance with UFC 3-600-01 (reference 12b). Additions shall be separated by 2-hour fire resistive construction from any existing structure that is not in compliance with current codes and standards. No additions, alteration or modernization project shall lessen the fire/life safety of the existing building.

12-3.3.2 Life Safety Upgrade and Fire Protection Assessment. To remain unchanged, existing facilities shall comply with the requirements for EXISTING construction requirements of NFPA 101 (reference 12a). It is intended that facilities, not in compliance with the EXISTING construction requirements of NFPA 101, be upgraded to meet the NFPA 101 requirements for NEW construction. However, if cost to upgrade to NEW construction criteria is determined prohibitive, DoD authorization must be obtained and coordinated for upgrade to EXISTING construction requirements based upon submission and approval of a fire and life safety assessment, and an *economic analysis. In any case, the minimum level of fire safety for upgrade of existing facilities shall comply with EXISTING construction requirements of NFPA 101 (reference 12a). A Life Safety Assessment (LSA) shall be performed in coordination with the JCAHO Statement of Conditions.

*NOTE: The economic analysis shall include comparative analysis of at least three different life safety assessment solutions for NFPA 101 compliance in accordance with JCAHO Standards. Economic Analysis shall include cost estimates supporting the following:

- complete prescriptive compliance with NEW construction criteria,
- complete prescriptive compliance with EXISTING construction criteria, and
- compliance with other equivalent alternative life safety solutions.

a. **Assessment Process**. The process of determining compliance with NFPA 101 (reference 12a) may be facilitated by the use of JCAHO s (reference 12c) "Statement of Conditions" document. Part 3 of the document is the "Life Safety Assessment (LSA)" section, which consists of a check list form designed to assess compliance with the

Life Safety Code. The document provides a systematic method of evaluating compliance, and each check list line item addresses a particular fire/life safety feature and includes the applicable reference paragraph or section of NFPA 101 (reference 12a).

b. **Compliance Equivalency**. Facilities determined not to comply with NFPA 101 (reference 12a) for existing occupancies may be reevaluated utilizing NFPA 101A (reference 12d). The Fire Safety Evaluation System (FSES) methodology may be used to determine if existing conditions and systems are equivalent to the Life Safety Code requirements.

c. **Compliance**. Facilities and/or facility feature(s) determined not to comply with NFPA 101 ((reference 12a), and determined not to be equivalent to NFPA 101 (reference 12a) by means of NFPA 101A (reference 12d), shall be corrected. Corrections may be facilitated by the use of the JCAHO's Statement of Conditions, Part 4, "Plan for Improvement (PFI)" The PFI should be maintained and updated on a regular basis or as recommended by the JCAHO.

12-3.4 **Construction Operations**. Fire protection and life safety provisions shall be provided during construction as specified by UFC 3-600-01, the National Fire Protection Association Codes and Standards, and the Interim Life Safety Measures (ILSM) of the JCAHO Manual (reference 12c). When a facility is to be occupied during a renovation, alteration or upgrade, consideration shall be given to the potential impact on life safety in occupied areas. Construction and demolition phasing shall be planned so that the integrity of fire and smoke partitions, exits, stairways, and vertical shafts, which are contiguous with inpatient areas, are maintained to the highest level possible. Appropriate safety measures in accordance with NFPA 101 (reference 12a) and NFPA 241 (reference 12q) will be incorporated into temporary structures.

12-4 **OCCUPANCY CLASSIFICATION**. Occupancy classification of medical facilities shall be defined by NFPA 101 (reference 12a). Facilities or portions of facilities, which are not required to be health care occupancy, may be classified as other occupancies provided that the requirements of NFPA 101 are satisfied.

12-5 **MEANS OF EGRESS**. Facilities shall meet the requirements of the Life Safety Code, NFPA 101 (reference 12a).

12-5.1 **Horizontal Exits**. Floors with inpatient sleeping rooms shall utilize horizontal exits to the fullest extent possible to maximize "defend-in-place" evacuation.

12-5.2 **Areas of Refuge**. Total evacuation of the occupants to the outside of the building is often impractical for inpatients located on upper floors. Therefore, areas of refuge shall be implemented through the use of smoke compartmentation when a rapid and complete evacuation is not feasible.

12-6 **INTERIOR FINISHES**. Interior wall, ceiling and floor finishes, and movable partitions shall conform to UFC 3-600-01 (reference 12b).

12-6.1 **Carpeting**. Carpeting and other textile wall coverings shall not be utilized on walls in smoke compartments with sleeping areas and shall not be utilized in other areas except as allowed by UFC 3-600-01 (reference 12b).

12-7 **FIRE DETECTION AND ALARM SYSTEMS (FDAS)**. Fire alarm systems shall be provided for all medical facilities in accordance with UFC 3-600-01 (reference 12b), and NFPA 101 (reference 12a), NFPA 99 (reference 12e), and NFPA 90A (reference 12f). These systems shall be installed in accordance with NFPA 72 (reference 12g) and NFPA 70 (reference 12n).

NOTE: Where mass notification is required, combining FDAS with mass notification systems is encouraged. Mass notification system shall be provided in accordance with UFC 4-021-01 (reference 12t). Combining FDAS with other building systems such as building automation, energy management, security, etc, is not permitted. Down-time caused by any of these non-life safety systems will also take the FDAS out of service which is unacceptable.

12-7.1 **Clinics**. Free standing clinics shall be provided with a supervised, manually operated, non-coded general fire alarm system. Exception: Large clinics over 4645 m^2 (50,000 square feet) may be provided with a coded system.

12-7.2 **Fire Alarm System Zoning**. Each smoke compartment shall be zoned (annunciated at the FDAS panel and at any remote annunciator panels) separately. Maximum area of each smoke compartment shall be as required by NFPA 101 (reference 12a).

12-7.3 **Alarm Indicators and Control Panels**. Locate the main control panel at the emergency area reception desk or at a 24-hour supervised location and coordinated with the facility. Large medical facilities may require additional locator panels at designated nursing stations and major lobbies. The fire detection system panel shall be provided with audible signals for power failure, open circuit, ground, smoke detector failure, sprinkler valve water-flow detection, and fire pumps.

12-7.4 **Automatic Smoke Detection**. Smoke detection shall be provided where required in accordance with NFPA 101 (reference 12a), NFPA 101A (reference 12d), NFPA 90A (reference 12f), NFPA 72 (reference 12g), ASTM A17.1 (reference 12r) and UFC 3-600-01 (reference 12b). Where many smoke detectors are required to be installed, analog addressable systems are encouraged. Spot type, ceiling mounted smoke detectors shall be photoelectric type.

NOTE: Smoke detection systems require significant testing and maintenance. It is critical that required detectors are properly installed and maintained. Providing detectors in locations that are not required increases the already high maintenance costs of alarm systems and strains the maintenance program for critical detection systems. If a facility or design warrants protection and criteria do not require detection, protection should be accomplished by sprinkler protection, preferably wet pipe sprinklers which provide superior protection with very little maintenance.

12-7.5 **Manual Fire Alarm Boxes**. Manual alarm initiation stations shall be located within 1.5 meters (5 feet) of each stairway exit door, exit doors to the outside, horizontal exits and normal means of egress, and shall comply with the requirements of NFPA 72 (reference 12g) and NFPA 101 (reference 12a).

12-7.6 **Occupant Notification**. Where "defend-in-place" evacuation is provided, alarm signals shall be coded. Audible notification device shall not be located within surgical operating rooms. Provide subdued audible indicating appliances in critical care areas.

12-7.6.1 Visual Alarms. Visual alarm notification is required for all medical facilities in accordance with NFPA 101. Visual alarms shall be in view of all nurses stations, exits, and at locations such as mechanical rooms where the operating noise levels (sound pressure) exceed the level of the audible alarm. For facilities that have a fire safety evacuation plan, which includes occupant notification by trained staff personnel, visible notification appliances are required only in public accessible areas (including corridors and hallways, lounges and lobbies, cafeterias, auditoriums, large conference rooms and public restrooms). For those facilities that do not have an evacuation plan, visible notification appliances shall be provided in all public accessible and patient accessible areas including exam and treatment rooms. Visual alarms are <u>not</u> required in areas that are used only by employees as work areas (individual offices, work stations) and staff-only spaces. Alterations for future accessibility must be considered when facility wiring is planned to facilitate a later connection to the building FDAS.

NOTE: Previous guidance was stipulated based upon occupancy classification. This criteria is applicable to all occupancies in which occupants are provided medical treatment.

12-7.7 **Fire Department Notification**. Systems shall be connected to the base fire department, or when not available, to a suitable location where responsible personnel are continuously on duty.

12-7.8 **Electrical Power Supply**. FDAS primary electrical power supply shall be provided from the life safety branch of the essential electrical system in facilities equipped with generator backup. Secondary electrical power shall be by means of battery backup.

12-8 **SMOKE CONTROL SYSTEMS**. Smoke control systems shall conform to NFPA 92A (reference 12h), NFPA 92B (reference 12i) and the appropriate sections of NFPA 101 (reference 12a). When a smoke detection system is used to initiate smoke control, it shall conform to the recommendations of NFPA 72 (reference 12g).

12-9 **AUTOMATIC SPRINKLER PROTECTION**. All facilities shall be protected throughout by an approved automatic sprinkler system provided in accordance with NFPA 13 (reference 12j) and UFC 3-600-01 (reference 12b). Sprinkler systems shall be installed throughout all medical facility spaces and rooms, including elevator machine rooms, walk-in freezers and cold rooms, computer rooms, telephone switch rooms, radiology and MRI suites, loading docks, electrical rooms, audio-metric booths (except

where constructed and listed with a one hour fire rating), vaults, paint spray booths, dry type lint collectors, dust collectors, and generator rooms. Sprinklers are not required where specifically exempted by NFPA 13.

12-9.1 Sprinkler protection is not required for the distribution zones and connection zones (space above suspended ceiling) of facilities designed and constructed in accordance with the requirements of the Integrated Building System. (Refer to Chapter 19 for IBS configuration criteria.) Distribution Zone spaces which require sprinklers, include electrical and communication closets, etc., and automatic box conveyor (ABC) rails and electric track vehicle systems (ETVS) tracks located within interstitial space over which a single line of sprinklers with no greater than 6 ft. spacing shall be installed.

12-9.1 **Elevators**. Install sprinklers in elevator pits and machine rooms only where required by NFPA 13. Sprinklers are not required at the top of elevator hoistways. Install standard sprinklers with intermediate temperature rating of 200°F or higher, in elevator pits and machine rooms. The sprinkler system shall be interfaced with elevator lobby smoke detectors for elevator recall, and with heat detector(s) and sprinklers for elevator electrical power shutdown requirements (shunt-trips).

12-9.2 **Sprinkler System Zoning**. Sprinkler systems shall be zoned by floor (at a minimum) for multi-story facilities. Zoning and system controls shall also correspond to smoke compartments, where provided. All sprinklers in a smoke compartment shall be piped as one system with one control valve and waterflow switch. Zoning shall also correspond to the fire alarm zoning.

12-9.3 **Sprinkler System Design**. New sprinkler systems that provide coverage of 139 m^2 (1,500 square feet) or greater, shall be designed by utilizing hydraulic calculation methodology, in accordance with NFPA 13 (reference 12j). The NFPA 13 special design approach shall not be used in health care facilities. Sprinkler design densities and corresponding remote design areas shall be in accordance with UFC 3-600-01 and as follows:

a. Smoke compartments with sleeping and treatment areas: Light Hazard.
b. Dining areas and kitchens: Ordinary Hazard Group 1.
c. Storage rooms, record storage, laundry rooms, mechanical rooms and similar rooms greater than 9 m^2 (100 sq. ft): Ordinary Hazard Group 1.
d. Shops other than woodworking shops: Ordinary Hazard Group 1.
e. Woodworking shops: Ordinary Hazard Group 2.
f. Boiler rooms: Ordinary Hazard Group 2.
g. High hazard spaces: Ordinary Hazard Group 2.
h. Bulk supply storage (Maximum height of 12 ft): Extra Hazard Group 1.
i. Rooms containing movable/mobile shelving/high density storage: Ordinary Hazard Group 2.

j. Laboratories with installations for use of flammable gas: Ordinary Hazard Group 2.

12-9.4 **Kitchen and Food Service Equipment**. Extinguishing systems shall be provided in food preparation areas. Self-cleaning water-wash ventilators with water-spray fire protection systems shall be used to protect cooking surfaces, ducts, grease removal devices, and range hoods in accordance with NFPA 96 (reference 12k).

NOTE: Water spray is permitted by NFPA 96 for protecting cooking surfaces and grease-laden exhaust ducts. Use of water reduces downtime of kitchen operations because of ease of cleanup.

12-10 **STANDPIPES**. Standpipe systems shall be provided in buildings 4 stories (40 ft in height) or greater, in accordance with UFC 3-600-01 (reference 12b) and NFPA 14 (reference 12s). Water supplies shall also be in accordance with UFC 3-600-01 (reference 12b).

12-11 **ELECTRONIC COMMUNICATIONS AND AUTOMATIC DATA PROCESSING (ADP) INSTALLATIONS**. Rooms and areas housing EPABX equipment or other electronic communications, large rooms containing ADP equipment, and electronic equipment providing control of critical medical equipment (i.e., MRI, CT Scanner) shall meet the requirements of NFPA 75 (reference 12l) and be protected in accordance with UFC 3-600-01 (reference 12b).

12-11.1 **Automatic and Manual Controls**. Controls to disconnect power to all electronic equipment and shut down the air conditioning system shall be provided.

12-11.2 **Halon Fire Extinguishing Systems**. Use of Halon fire extinguishing systems is prohibited.

12-12 **ATRIUMS/MALLS**. Atriums and medical malls shall meet the requirements of NFPA 101 (reference 12a) and shall be designed to comply with NFPA 92B (reference 12i).

12-13 **PROTECTION FROM HAZARDS**. Protection from hazards shall be in accordance with UFC 3-600-01. Storage rooms shall be considered hazardous areas and comply with appropriate occupancy chapter requirements of NFPA 101.

12-13.1 **Flammable and Combustible Liquid Storage**. Flammable and combustible liquid storage must be in a fire resistance rated enclosure complying with NFPA 30.

12-13.2 **Gas Storage**. Flammable gas storage must be in a fire resistance rated enclosure complying with NFPA 99. Nonflammable medical gas storage must be in a fire resistance rated enclosure complying with NFPA 99.

12-13.2.1 Oxygen Storage. Oxygen storage rooms must be located at least 15 meters (50 feet) from flammable storage rooms.

12-14 **INTEGRATED BUILDING SYSTEMS (IBS)**. For a functional description of the various elements of the Integrated Building System refer to Appendix E.

12-14.1 **Requirements**. Fire safety requirements for facilities designed using the Integrated Building System (IBS) shall be in accordance with the same codes and standards applicable to any non-IBS facility. The following IBS criteria is based upon a special study titled Fire Performance of Interstitial Space Construction System (NBSIR 85-3158) (reference 12m), conducted by the National Institute of Standards and Technology (NIST). The IBS criteria herein is coordinated with the requirements of the referenced codes and standards to accommodate the nontraditional characteristics of the IBS approach. Where variations between this standard and other applicable codes and standards occur, the fire safety design requirements for IBS facilities indicated herein, shall govern.

Basic Concept. In IBS designs, as in traditional building configurations, smoke compartments are separated by fire-rated smoke barriers. The area of an IBS module, i.e. smoke compartment, can be no greater than 2090 sq. m (22,500 sq. ft). The IBS modular zones which require smoke barrier separation for smoke compartmentation are the occupied and connection zones.
Neither, the distribution zone, nor the utility pod is required to be subdivided by smoke barriers. In addition to this section, refer to Appendix E, Integrated Building System, for a description of the IBS configurations, modules and zones.

NOTE 1: The integration of IBS facility building modules with NFPA smoke compartmentation requirements is a basic fire protection/life safety principle of this non-traditional building concept. When applying NFPA 101, the modular configuration of the IBS is a significant benefit because compartmentation becomes a natural byproduct.

NOTE 2: **Coordination of Systems**. Supply services to any system module shall serve an area that corresponds to the smoke compartment, including electrical power, fire alarm zoning, automatic sprinkler zoning, and HVAC zoning. Supply services are defined as utilities, i.e., water supply, electrical power and medical gases that originate outside of the module, feeding utilities which are centrally located in the utility pod of each system module and then distributed to each functional zone via the distribution zone of each system module.

NOTE 3: **Number of Stories**. The walk-on platforms constituting the floor level of the distribution zones do not constitute separate stories. Each occupied zone and its corresponding floor is counted as an independent floor level.

12-14.2 **Construction**.

12-14.2.1 Floor-to-Floor Fire Separation. A 2 hour fire resistive separation is required between floors. The fire resistance rating runs in a horizontal plane along the utility pod floor, then vertically along the wall separating the utility pod from the occupied zone and connection zone. The fire resistance rating then continues along the walk-on

platform to the outside wall. The walk-on platform of the distribution zone shall be designed in accordance with NBSIR 85-3158 (reference 12m). See Figure 12-1.

12-14.2.2 Occupied Zone.

a. The building modules of IBS facilities at the occupied zone shall be the designated smoke compartments separated from each other by 1 hour fire rated construction. These separations shall meet the smoke barrier requirements of NFPA 101 (reference 12a).

b. Walls, smoke barrier partitions, occupancy separations (not greater than 2 hour fire resistance) and horizontal exit walls shall terminate at the bottom of the walk-on platform. Occupancy separations (2 hour fire resistance and greater) of multi-story facilities shall not terminate at the walk-on platform, but pass continuously through the distribution zone and structural floor and terminate at the bottom of the occupied zone floor above.

12-14.2.3 Distribution Zone.

a. Dividing the distribution zone into smoke compartments with smoke barriers is not required.

b. Horizontal exit or smoke barrier walls, located in the occupied/connection zone need not be extended up into the Distribution Zone.

12-14.2.4 Utility Pods.

a. Utility Pods shall be separated from the distribution zones by 1 hour fire rated construction and from the occupied and connection zones by 2 hour fire resistive construction.

b. The structural members in the utility pod shall have a 2 hour fire resistive rating.

12-14.2.5 Structural Members.

a. **Columns**. All columns shall be provided with the required degrees of fire resistance within all zones.

b. **Occupied Zone Floor**. As part of the IBS floor/ceiling assembly**,** the occupied zone floor slab, except at the utility pod, is not required to have an independent fire resistance rating. However, all penetrations shall be firestopped.

c. **Other Structural Members**. Primary structural members (supporting more than one floor) located within the distribution zone, such as columns and girders and trusses, shall have a 2-hour fire resistive rating or be protected in accordance with the fire resistance

requirements of the International Building Code (reference 12p). Secondary structural members (supporting only one floor) within the distribution zone are not required to be fireproofed. Lateral and seismic bracing within the distribution zone need not be fireproofed provided these members do not carry vertical loads (live or dead).

NOTE: A full-scale fire test of the IBS structural assembly was conducted by NIST (NIST publication NBSIR 85-3158) for the VA in 1985 and again for a specific DoD project in 1995. Results of the 1985 NIST test determined that ALL structural steel within the interstitial space (distribution zone) is adequately protected for 2-hours by the walk-on platform/interstitial space arrangement without any direct fireproofing to the structural steel within the interstitial space.

12-14.2.6 Openings. To prevent fire and smoke migration into the distribution zone, openings through the walk-on platform shall be protected as follows:

a. All penetrations (ducts, pipe, cables, conduit, etc.) shall be firestopped at the walk-on platform with approved material in accordance with NBSIR 85-3158 (reference 12m), or with an approved through-penetration protection system.

b. Shafts shall be enclosed in properly rated construction and tightly sealed for the full perimeter of the penetration at the walk-on platform in accordance with NBSIR 85-3158 (reference 12m), or with an approved through-penetration protection system.

12-14.2.7 Ducts and Dampers.

a. Fire dampers are not required where ducts penetrate the 1 hour fire rated partition between the utility pod and the distribution zone.

b. Fire dampers are required where ducts penetrate 2 hour fire resistive partitions between the utility pod and the occupied and connection zones.

c. Fire dampers are not required in ducts for openings in the walk-on platform less than or equal to 150,000 sq. mm (225 sq. in). This includes supply ducts from the distribution zone to the occupied zone, exhaust ducts, and return ducts from the occupied zone to the distribution zone.

d. The total cumulative open space created by unprotected duct penetrations in the walk-on platform above any single smoke compartment or room in the occupied zone shall not exceed 0.98 percent of the area of the respective smoke compartment or room.

NOTE: This limit is provided as a design control feature to prevent over-penetrating a given area of walk-on platform with undampered duct penetrations. The value of 0.98 percent is based upon the percentage used in the 1985 NIST test and has been coordinated with the JCAHO Standards group.

e. Flexible duct work (Class 1-UL Standard 181) is permitted in the distribution zone for connections less than 2.4 m (8 ft.) long and shall be no larger than 300 mm (12 in.) in diameter.

f. Smoke dampers are required in ducts in the distribution zone where a duct serves more than one smoke compartment. Where required, the smoke damper shall be located in the duct at the approximate location where the smoke barrier is located below in the occupied zone.

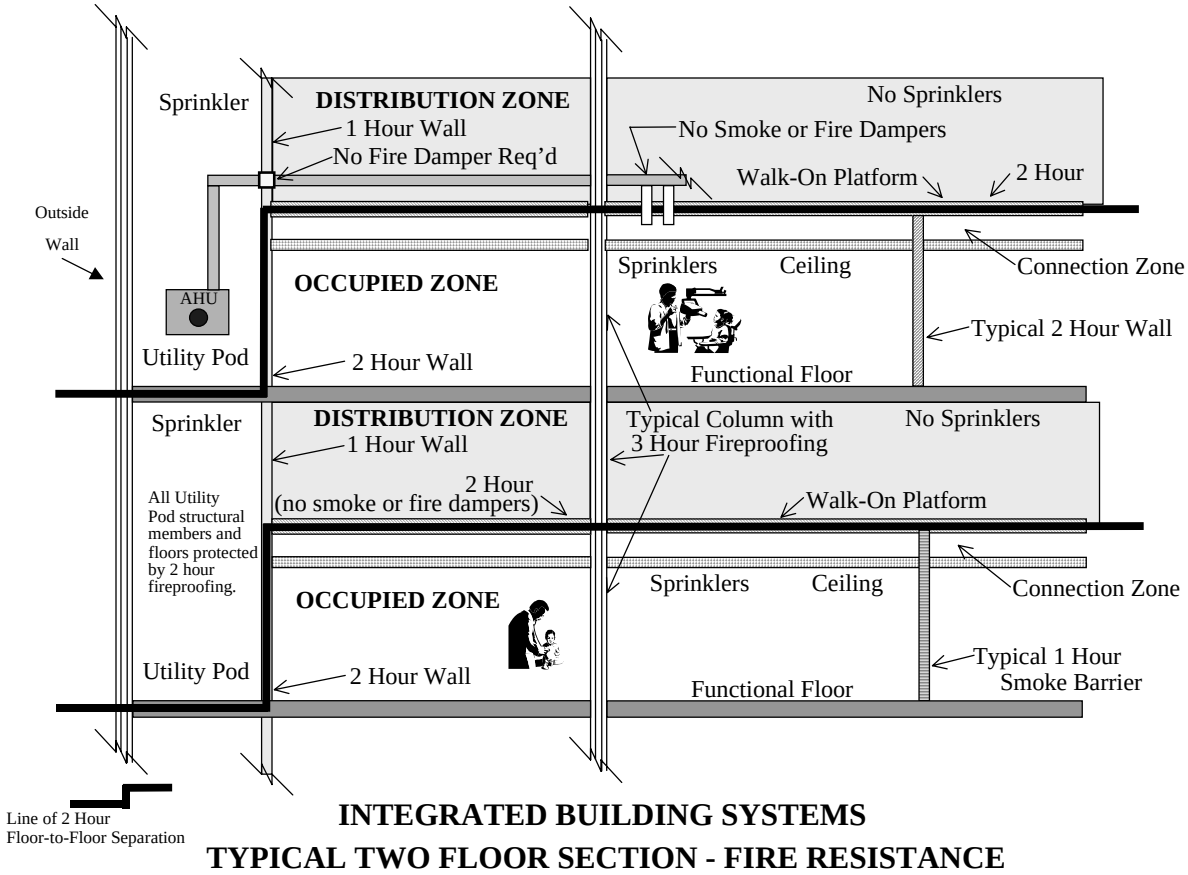

Figure 12-1.

12-14.3 **Sprinkler Systems**.

12-14.3.1 Approved automatic supervised sprinkler protection shall be provided throughout the occupied zone and in the utility pod. Sprinkler protection is not required in the distribution zone or the connection zone.

12-14.3.2 Fire alarm system supervision and annunciation of sprinkler system zones shall be coordinated with the compartmentation of each IBS module.

12-14.4 **Standpipe Systems**. Standpipes shall be provided in buildings when the top floor or top walk-on platform is greater than 10 m. (40 ft) above grade, or in buildings

where fire department access is difficult. Standpipes shall be provided in accordance with NFPA 14 (reference 12s).

12-14.4.1 Each enclosed exit stair shall include an automatic Class-I standpipe. All hose connections shall be provided with 63 mm (2½-inch) hose valves with 63mm by 38mm (2½-inch by 1½-inch) reducing caps.

12-14.4.2 The sprinkler riser(s) for a module shall be combined with the standpipe riser(s) within the module. Hose outlets will be provided on the landings at the occupied zone at the entrances to the distribution zone located in the utility pod, and on each side of horizontal exit barriers.

12-14.5 **Smoke Control and Management**. Each facility shall be evaluated on an individual basis for the requirements for a smoke management system. Typically, the means to manage the flow of heat, smoke and other products of combustion are inherent to IBS facilities. Building systems shall be coordinated and interfaced in accordance with NFPA 92A and NFPA 92B (references 12h and 12i) to achieve smoke control and management. "Smoke removal" is not considered an "engineered smoke control system."

12-14.5.1 Zoned smoke control shall be provided for IBS facilities provided with quick response sprinklers throughout smoke compartments with patient sleeping rooms and which are greater than two stories. Where inpatients can be evacuated directly outside without requiring assistance to traverse a vertical exit component, smoke control is not required. Performance criteria for smoke management shall be established for each facility.

12-14.5.2 Smoke management shall be provided for atriums, malls and other large volume spaces.

12-14.5.3 A means for purging the distribution zone of smoke and other products of combustion for post fire operations shall be provided. Typically a manual smoke purge system shall be provided for each individual system module with manual remote control available from the fire emergency control center.

12-14.5.4 Every effort shall be made to design all HVAC systems to be contained within an individual module. Smoke management should be zoned and annunciated by IBS module.

12-14.6 **Fire Detection and Alarm Systems**. Each project shall be evaluated to determine the need for detection systems in special areas using NFPA 101 (reference 12a) and NFPA 72 (reference 12g) for guidance. All fire protection devices shall annunciate at the fire emergency control center. System initiating device signals shall be annunciated by category of signal (alarm, supervision, trouble), type of device and location (floor and module).

12-14.6.1 System supervision and alarm zoning shall be coordinated with the fire and smoke compartments, and IBS zones of each module.

12-14.7 **Distribution Zone**.

12-14.7.1 IBS Concept. The distribution zone is an unoccupied space and shall not be utilized for any storage.

12-14-7.2 Access Door. An access door from each required exit stairway shall be provided to the distribution zone. Access doors shall be locked and accessible only by key. Each access door shall bear the sign "Storage in This Area is Prohibited by Order of the Fire Marshall." A similar sign shall also be placed inside the space.

12-14.7.3 Means of Egress. The access door is the primary means of egress for distribution zone occupants and shall meet the exit and ease of operability requirements of NFPA 101 (reference 12a).

12-14.7.4 Fire Alarm Features. Fire alarm devices located in the distribution zone are part of the module fire alarm evacuation system.

a. A manual pull station shall be provided in the distribution zone at each access door. Zoning for annunciation of this device shall be coordinated with the exit enclosure serving the module occupied zone. The manual pull station shall have an independent alarm annunciation zone.

b. Alarm indicating devices shall be provided for occupant notification throughout the distribution zone. Upon any alarm initiating signal within a module, the indicating devices within the distribution zone of that module shall activate.

c. Smoke detection is required at each elevator access landing in the distribution zone. The smoke detector(s) shall be connected to the elevator controls and provide elevator response per NFPA 101 (reference 12a).

12-14.7.5 Marking of Means of Egress.

a. Access aisles shall be delineated on the surface of the walk-on platform from the most remote point to the access door. Access aisles shall be painted yellow with direction arrows or cross-hatching indicating direction to the access door.

b. Exit signs shall be illuminated and located at each access door. Two signs shall be provided; one above the doorway and one adjacent to the doorway within 36 inches of the walk-on platform. Exit signs shall also be located along the access aisles. Exit signs shall be in accordance with the size and illumination requirements of NFPA 101, Section 5-10, "Marking of Means of Egress" (reference 12a).

12-14.7.6 Egress Lighting. Egress illumination shall be provided. The degree of illumination and location of lights shall be determined for each module.

12-14.7.7 Electrical Power. Exit signage and egress lighting shall be on life safety circuits and provided with standby or emergency power. Since the distribution zone space is normally unoccupied, key-operated light switches, located at each access doorway, shall activate normal lighting, egress illumination, and exit sign illumination within the module in accordance with NFPA 70 switch requirements for control of emergency lighting circuits. This shall minimize electrical usage and replacement of lamps in the distribution zone.

12-14.7.8 Cables and Conductors. All cables and conductors shall be run in metal cable trays in accordance with the requirements of NFPA 70 (reference 12n). The cables shall be segregated into separate compartments within each cable tray.

REFERENCES

12a. NFPA 101, "Safety to Life from Fire in Buildings and Structures" (Life Safety Code)

12b. UFC 3-600-01, "Design Fire Protection Engineering for Facilities(January 16, 2004). http://www.wbdg.org/ccb/DOD/UFC/ufc_3_600_01.pdf

12c. Joint Commission on Accreditation of Healthcare Organizations (JCAHO) Manual.

12d. NFPA 101A, "Guide to Alternative Approaches to Life Safety" (Fire Safety Evaluation System (FSES))"

12e. NFPA 99, "Health Care Facilities"

12f. NFPA 90A, "Installation of Air Conditioning and Ventilation Systems"

12g. NFPA 72 “National Fire Alarm Code"

12h. NFPA 92A, "Smoke Control Systems"

12i NFPA 92B, "Smoke Management System in Malls, Atria, and Large Areas"

12j. NFPA 13, "Installation of Sprinkler Systems"

12k. NFPA 96, "Ventilation Control and Fire Protection of Commercial Cooking Equipment"

12l. NFPA 75, "Protection of Electronic, Computer/Data Processing Equipment"

12m. NBSIR 85-3158, "Fire Performance of Interstitial Space Construction Systems"

12n. NFPA 70, "National Electric Code"

12o. NFPA 220, "Types of Building Construction"

12p. ICC (International Code Council) International Building Code (IBC)

12q. NFPA 241, "Safeguarding Construction, Alteration and Demolition Operations"

12r. ASME/ANSI A17.1, “Safety Code for Elevators, Dumbwaiters, Escalators, and Moving Walks”

12s. NFPA 14, "Standpipe, Private Hydrant and Hose Systems."

12t. UFC 4-021-01, “Design and O&M: Mass Notification Systems” (latest edition).

12u. Draft UFC 3-490-06, “Design: Elevators”.

SECTION 13

PHYSICAL SECURITY

13-1 **GENERAL**. This section provides facility design guidance for physical security and crime prevention. Established installation security strategies should also be taken into consideration. Physical security design and construction considerations may include features discussed in Section 14: Antiterrorism Force Protection.

13-2 **DESIGN CRITERIA**. Guidance for physical security design is provided in 21 CFR 1301.72, “Title 21 Code of Federal Regulations Section 1301.72" (reference 13a), OPNAVINST 5530.14C, "Navy Physical Security Manual" (reference 13b), and in using Military Department criteria.

13-3 **ELECTRONIC SECURITY SYSTEMS**.

13-3.1 **Systems Considerations**. Electronic security systems, including Intrusion Detection Systems (IDS), duress alarms, electronic access control systems and Closed Circuit Television (CCTV) systems, shall be provided for facilities when required by the using Military Department. Multiple electronic security systems may be integrated to provide an overall facility security system. A staff identification card system with multiple levels of access control may be provided. Package inspection devices may also be considered for mail rooms. See Section 10: Communications Systems for information on electronic security systems.

13-3.2 **Systems Design**. Construction documents for electronic security systems shall identify sensor locations and include floor plans, schematics, riser diagrams, security equipment schedules and typical details. Floor plans shall locate all monitoring and control equipment. Security equipment schedules shall include room and door numbers, sensors, alarm control panels, switches and access control devices. Electronic security systems shall be provided with uninterruptible power sources, dedicated electrical service panels, interfaces with installation security systems, and local and remote alarms, as required by the using Military Department.

13-4 **KEYS AND LOCKS**. The master key and lock plan for a facility shall provide multiple levels of entry control. A master key system shall be provided for all areas with the following exceptions. Separate keying systems are required for pharmacies. Separate keying systems should also be considered for medical supply storage areas or facilities; food service facilities; exchange service facilities; mail rooms; mechanical, electrical and communications equipment rooms; and housekeeping and janitorial rooms.

13-5 **LEVELS OF SECURITY PROTECTION**.

13-5.1 **Intrusion Detection Systems (IDS)**. Exterior doors and operable windows shall be provided with IDS sensors with alarms monitored at the installation security station and at other locations if required by the using Military Department.

13-5.2 **Hospitals**. In addition to the above, security shall be further enhanced by:

13-5.2.1 Remote Locking. Remote, electrically operated locks that can be controlled from a central point such as the emergency department reception desk or a hospital command and control center. This system establishes the emergency department reception desk or the command and control center as the hospital Central Security Operations Point after daytime hours.

13-5.2.2 Intrusion Detection Systems (IDS**)**. IDS planned and designed to meet the security requirements of the location and the using Military Department directives.

13-5.2.3 Closed Circuit Television (CCTV) Systems. CCTV systems for areas as specified by the using Military Department.

13-5.2.4 Card Access Systems. Card access systems for exterior doors and sensitive areas such as computer rooms, pharmacies, and other areas as specified by the using Military Department.

13-6 **SPECIAL CONSIDERATIONS FOR SECURITY SENSITIVE AREAS/ROOMS**. Sensitive areas/rooms shall be designed to store valuable assets, i.e., funds, narcotics, dangerous drugs, and controlled substances/materials. The most cost-effective method of providing adequate security for these assets shall be selected.

13-6.1 **Safes**. Drugs classified as Schedule I or II controlled substances under the Controlled Substance Act of 1970 must be stored in safes or vaults. Drugs classified as Schedule III through V may also be stored in safes or vaults as deemed appropriate by the using Military Department.

13-6.2 **Vaults**. Features to be considered for vault storage areas are outlined in 21 CFR 1301.72 (reference 13a) and using Military Department directives.

13-6.3 **Pharmacies**. Walls, floors and ceilings of pharmacies shall provide resistance to forced or surreptitious entry and, where necessary, shall be reinforced. Doors and windows shall be kept to a minimum and doors shall be keyed separately from the master key system. IDS sensors shall be installed at all doors and windows including windows opening to corridors. Walls surrounding pharmacies shall be constructed in accordance with 21 CFR 1301.72 (reference 13a). As a minimum, perimeter walls shall be full height from floor slab to structure above.

13-6.3.1 Doors. Doors shall be provided with security hinges and shall be locked with security locksets. Doors may be lightweight, covered with 9 to 12 gauge steel security mesh or 16 gauge sheet steel fastened with smooth-headed bolts and nuts peened in place. Other considerations include “peep holes,” a cipher lock or card access system for the main staff entrance door, double locking locksets with 1-inch throws, warning signs stating doors must remain unlocked during normal operating hours (for fire egress), and warning signs stating “Controlled Area”.

13-6.3.2 Windows. Provisions such as roll-up shutters, shall be made for securing all service windows after normal operating hours. Frames holding roll-up shutters and security screens or bars must be securely fastened with smooth-headed bolts with nuts peened in place.

13-6.3.3 Heating and Ventilation Ducts. Duct terminals and connecting points must be in exposed locations where they may be readily observed to detect tampering. Openings of eight inches or larger must be protected with 9 to 12 gauge steel security mesh. The mesh will either be welded to the duct or secured with smooth-headed bolts with nuts peened in place.

13-6.4 **Medical Supply Storage Areas or Facilities**. In addition to the criteria provided for Pharmacies above, high value, critical and pilferable resources stored in this type of storage area or facility shall be enclosed within two or more time-delay barriers, i.e., fences, security cages, building walls, vaults or locked doors. For specific requirements, see 21 CFR 1301.72 (reference 13a) and using Military Department directives.

13-6.5 **Other Security Sensitive Areas/Rooms**. Other activities or locations may be identified by the using Military Department as security sensitive. These areas/rooms must minimize the security risk for these activities or locations.

REFERENCES

13a. 21 CFR 1310.72: Title 21 Code of Federal Regulations Section 1301.72

13b. OPNAVINST 5530.14C, "Navy Physical Security Manual."

SECTION 14

ANTITERROISM FORCE PROTECTION

14-1 **GENERAL**. Force Protection is a security program intended to protect assets: people, facilities, and equipment. Please refer to “Department of Defense Minimum Antiterrorism Standards for Buildings” (reference 14a) which partially implements the requirement of DoD Instruction 2000.16, “DoD Combating Terrorism Program Standards,” with Change 1, May 10, 1999, for development of antiterrorism/force protection guidelines for new construction. This standard provides minimum construction requirements that will be incorporated in inhabited new construction and major renovations. Force Protection guidance is also provided by OPNAVINST 5530.14c, "Navy Physical Security Manual" (reference 14b).

14-2 **SECTION 13: PHYSICAL SECURITY.** Force Protection design and construction may include features discussed in Section 13: Physical Security. Please review this section.

REFERENCES

14a. UFC 4-010-01 “Department of Defense Minimum Antiterrorism Standards for Buildings”, latest edition.

14b. OPNAVINST 5530.14C, "Navy Physical Security Manual."

SECTION 15

MEDICAL AND DENTAL EQUIPMENT

15-1 **GENERAL**. This section provides guidance on medical and dental equipment for facilities. Equipment procurement for projects shall be in accordance with MIL-STD-1691, "Construction and Material Schedule for Military Medical and Dental Facilities" (reference 15a). This standard provides a uniform basis upon which the using Military Department can identify items of construction and material and fix logistical and financial responsibility (see Section 1).

15-1.1 **Approval of Equipment Design Features**. Quality and type of equipment and furniture, e.g., stainless steel, steel, wood, gas fired or electric, shall be determined by the using Military Department in each instance, based on the intended life and mission of the facility and the location and circumstance under which construction is to be accomplished.

15-1.2 **Approval of Substitutions**. When design and space limitations necessitate substitution of equipment in the preparation of drawings, these substitutions shall be coordinated with and approved by the using Military Department. If the substitution results in a change in the Category E and F funding level (increase), it must also be coordinated with TMA-**PPMD**.

15-2 **PROCUREMENT**. Provide logistical categories of equipment in accordance with MIL-STD-1691. The using Military Department will transfer items of existing equipment to the new or altered facility whenever feasible and economical. This decision to reuse existing equipment shall be based upon the life expectancy of the equipment at the time of beneficial occupancy (BOD), the repair costs experienced with the existing unit, and the operational considerations involved in moving the equipment prior to operation of the new or altered facility.

15-2.1 **Logistical Responsibility**. Equipment shall be funded, procured and installed in accordance with the following legend. Each item of equipment is identified in MIL-STD-1691 (reference 15a) by these designations.

15-2.1 A- Contractor furnished and contractor installed (CFCI) from military construction appropriation funds (Military Construction Appropriations, MILCON).

15-2.2 B- Government furnished from the using Military Department's operating funds other than construction and installed by Contractor (GFCI) construction funds (Military Construction Appropriations, MILCON). Operating funds shall be as determined by the using Military Department.

15-2.3 C- Government furnished and government installed (GFGI) from existing assets or from funds other than MILCON as determined by the using Military Department.

15-2.4 D- Other (leased or rented equipment, or that obtained under special conditions as indicated). Funds shall be determined by the using Military Department and other than MILCON.

15-2.5 E- Government furnished and Contractor installed from Military Construction Appropriation funds (MILCON). Delay procurement until the latest date feasible that shall not interfere with project completion to acquire the latest technology.

15-2.6 F- Government furnished and government (vendor) installed from Military Construction Appropriation funds (MILCON). Delay procurement until the latest date feasible that shall not interfere with project completion to acquire the latest technology.

15-2.7 G- Government furnished and government installed from other than MILCON funds through special justification, authorization and funding. Examples of category G equipment or equipment systems are Composite Healthcare (computer) Systems (CHCS) implementation and so forth.

15-2.8 R- Existing government owned equipment that will be relocated and reused. Cost of relocation, if incurred, will be from funds as determined by the using Military Department and other than MILCON.

15-3 **DESIGN**.

15-3.1 **Casework**. All built-in casework shall be designed in accordance with MIL STD 1691, reference 15a.

15-3.1.1 Provide corrosion resistant steel (CRS) or other nonporous, seamless joint casework in the following areas: operating and delivery rooms; their sub-sterile and cleanup areas; laboratory (as required by the Military Department); central sterile supply decontamination and clean-up areas; and autopsy and its associated clean-up areas.

15-3.1.2 Movable, modular ("systems") casework systems may be used in projects deemed appropriate by the using Military Department.

15-4 **FOOD SERVICE EQUIPMENT**.

15-4.1 Reference Appendix F**.**

15-5 **HIGH TECHNOLOGY EQUIPMENT**. The planning for and inclusion of new or unique medical technology such as linear accelerators, Positron Emission Technology (PET), lithotripsy, Magnetic Resonance Imaging (MR), hyperbaric chambers, etc., in a MILCON project is the responsibility of the Service(s). Design shall be in accordance with the appropriate Code of Federal Regulation (CFR) and National Council on Radiation Protection Measurements (NCRP) guidelines and recommendations and guidance of the respective manufacturers.

15-6 **HYPERBARIC CHAMBERS**. Hyperbaric oxygen therapy is used as an adjunct to the clinical and surgical treatment of certain diseases. It consists of administering oxygen to the patient at pressures greater than one atmosphere in a compressed air chamber. The DOD agency responsible for design requirements and certification is the Naval Facilities Engineering Command. This agency is available to assist Design Agents, using Military Departments, and A-E firms as needed.

REFERENCES

15a. MIL-STD-1691, "Construction and Material Schedule for Military Medical and Dental Facilities."

15b. MIL-C-29240, "Casework Moveable and Modular for Hospital Laboratories and Pharmacies." http://www.wbdg.org/ccb/FEDMIL/c29240.pdf

15c. MIL-M-29241, "Material Handling Units for Medical Facilities." http://www.wbdg.org/ccb/FEDMIL/m29241.pdf

SECTION 16

TRANSPORTATION AND MATERIALS HANDLING SYSTEMS

16-1 **GENERAL.** This section provides guidance for the study, selection and design of transportation and material handling systems, and establishes requirements for elevators, dumbwaiters, pneumatic tube systems, material delivery equipment, pedestrian traffic, service cart systems, and gravity chute return systems for linen and trash in military healthcare facilities. The section is not intended to cover all aspects of transportation analysis or design, but rather to act as a standard for use by qualified medical transport consultants (MTC).

16-1.1 **Scope**. This section applies to horizontal and vertical circulation within healthcare facilities, and the transportation devices, equipment and methodologies required for efficient, cost effective and timely movement of people, equipment, materials, and related materials management functions. Program factors for patient beds, healthcare procedures and departmental workloads should be provided by the user service and should be utilized in computing traffic demand loads. Select vertical transportation on the basis of acceptable response and waiting time intervals. Calculate the intervals from an analysis of elevator car speed, traffic transfer time, door operation cycle and other applicable system capacity factors.

16-1.2 **Waste Management**. Section 17, Waste Management, of this Unified Facilities Criteria is the primary reference for medical facility waste definition, handling, and disposal; closely coordinate transportation systems studies and design with the contents of that Section.

16-1.3 **Construction Phasing**. Where phased construction is necessary, provide studies and designs for each phase. Provide design for transport system elements not required until later stages to allow for phased installation. Phased installation shall be accomplished with a minimum of rework and without major disruptions to the facility's operations. Give specific consideration to placement of transport devices for present functions and for possible future facility modification.

16-1.4 **Addition and Alteration Projects**. These criteria are intended primarily for new construction, however addition and alteration projects will meet these criteria to the extent practicable. When additional elevator banks are to be provided for facility additions, they must be located along the same major circulation paths that serve the existing elevators, where feasible. See also Paragraph 16-3.2.6.

16-1.5 **Area Allocations**. Base the floor area requirements for transportation equipment on the specific equipment included in the transportation analysis. The area allocated for such conveyances is part of the central circulation factor. Additional area for penthouses or other transportation equipment rooms will be considered part of the mechanical space allotment. Consider shaft space as part of the circulation allotment. If the transportation analysis justifies a system requiring more than the assigned area, additional space for elevator lobbies, cart queuing space, shafts and penthouses must be identified early in the Concept Design phase. The designer will submit justification for

deviations from criteria, and illustrate how additional area allowances would increase operational efficiency, improve service to patients, or reduce costs. Systems not providing high utilization of equipment, such as dedicated elevators for movement of patients from emergency to surgery, must be justified on the basis of required planning configuration, the segregation of incompatible traffic, or operational economical benefits.

16-2 **TRAFFIC SEPARATION AND CIRCULATION**. Traffic is categorized as follows:

a. Pedestrian - inpatient, outpatient, staff and visitor;
b. Vehicular - patient transport;
c. Equipment/Materials - sterile, clean and soiled equipment and materials.

Review each category independently to determine its unique transportation requirements.

16-2.1 **Traffic Separation**. Establish traffic patterns to separate the various traffic types in an efficient, logical, safe and secure manner, while maintaining levels of aseptic control consistent with the requirements of the facility. Consider all of the following factors for separation for both horizontal and vertical circulation: patient privacy; handicapped access; aseptic control; routing efficiency; utilization of appropriate hardware systems, safety and security. Where circulation conflicts occur, prioritize traffic as follows:

a. Patient
b. Staff
c. Equipment
d. Visitors
e. Materials/logistics.

When a facility is sufficiently large and complex to require more than four elevators, separate passenger and vehicular elevators.

16-2.2 **Circulation**. Design the overall circulation to provide the most direct routing practical. Place elevators on the direct horizontal path between the areas they serve, wherever possible.

16-2.3 **Equipment/Materials Circulation**. Separate the equipment/materials traffic from patient and visitor traffic as noted on the Elevator Traffic Separation Guide Matrix, Figure 16-1. Where separate elevators are not required, separate the materials traffic by schedule and policy. Careful, simple and clear space planning can maximize separation between visitor/patient and staff/materials/logistics. Primary horizontal materials circulation should occur on a single level, with vertical penetrations that are convenient to heavy use areas. It is undesirable for carts, pallet trucks, and similar

material carriers to be pushed long distances on floors and corridors routinely traveled by patients or visitors. Establish horizontal right-of-ways to:

a. Aid in directing traffic to the appropriate vertical core, while avoiding inappropriate elevators and other building areas.

b. Provide high levels of patient privacy.

c. Eliminate potential contamination of clean and sterile areas.

16-2.4 **Clean and Soiled Material Separation**. Materials management programs shall provide for clean and soiled separation consistent with all applicable codes and standards, including those of the Joint Commission for the Accreditation of Healthcare Organizations (JCAHO).

16-2.4.1 Soiled Material. Soiled materials are normally transported in separate covered or closed carts designed to provide containment of the material. Soiled material transport may occur in the same corridor and elevator systems that handle other traffic; however, soiled materials are not transported on the same elevator at the same time with patients, visitors, or clean or sterile materials. Transport circulation design shall allow soiled carts to be adequately washed prior to reuse as a soiled container, and washed and sanitized prior to use for clean materials.

16-2.4.2 Sterile Material. Transport all sterile material for use in Surgery, Catheterization and Labor/Delivery or other areas requiring sound aseptic controls from the sterile processing / storage area to its destination via a clean route that will not compromise the integrity of the material. Where case carts are used, they shall be transported from sterile storage to the clean surgical core by means that protect the cart and its contents from contact with less clean environments.

16-3 ELEVATOR AND ESCALATOR PLANNING FACTORS.

16 -3.1 **Population**. The population to be considered will be defined by the using Service.

16-3.2 **Elevator Traffic Study and Analysis ETSA**. Prepare the Elevator Traffic Study and Analysis to determine the appropriate types, locations, sizes, speeds and groupings of elevators. For facilities less than 9280 gross square meters (100,000 GSF), an elevator traffic study and analysis may not be required. Determine the loading density and the load-unload time for each facility during site visits to account for unique conditions at a facility and the cultural aspects of the area (i.e., amount of "personal space" required by individuals; number of visitors per patient; number of escorts or companions accompanying outpatients; etc.).

16-3.2.1 **Elevator Loading Densities**. Maximum estimated densities for elevator loading will approximate:

a. 0.23 to 0.325 sm (2.5 to 3.5 sf) per pedestrian.

b. 0.42 to 0.6 sm (4.5 to 6.5 sf) for a person on crutches/walker.

c. 0.6 to 0.79 sm (6.5 to 8.5 sf) per wheelchair.

d. 1.3 to 1.5 sm (14 to 16 sf) per gurney.

e. 1.67 to 2.23 sm (18 to 24 sf) per bed.

Verify average loading densities during site visits of existing facilities.

16-3.2.2 Elevator Load and Unload Times. Estimated average load and unload times, using the elevators as specified herein, will approximate the following times:

a. 2.2 to 2.4 seconds per normal pedestrians in passenger elevator cars;

b. 2.2 to 3.4 seconds per pedestrian impaired by medical/pharmacological treatment.

c. 4.8 to 8.0 seconds per wheelchair.

d. 4.4 to 9.6 seconds per person on crutches/walkers.

e. 7.5 to 12.0 seconds per gurney.

f. 8.8 to 15.0 seconds per bed.

Verify average load and unload times during site visits to existing facilities.

16-3.2.3 Elevator Traffic Analysis. For passenger and patient service elevators, base the elevator traffic analysis on average high peak traffic conditions over a period of fifteen minutes or less.

16-3.2.4 Passenger Elevators. For passenger elevators, the Elevator Traffic Study and Analysis must evaluate all peak periods, including but not limited to:

a. Morning Shift Change Peak (primarily an up-peak period).

b. Lunch Peak (heavy two way traffic).

c. Afternoon Shift Change Peak (primarily heavy down peak, with moderate opposing traffic).

When determining elevator loading, factor the number of persons/vehicles that can physically load into an elevator into the traffic study. Loading densities for hospital and outpatient clinic elevator cars are unlike elevator populations in most other buildings. Where pedestrian traffic is mixed with substantial vehicular traffic, the space used by carts, gurneys, beds, portable X-Ray equipment and the like, must be factored into the Elevator Traffic Study and Analysis. Identify impacts of overlapping traffic patterns between inpatient and outpatient functions. In existing buildings, the populations must be studied during site visits to determine the percentage of traffic that is consumed by crutches, braces, wheelchairs, casts, and similar items.

16-3.2.5 Patient Service Elevator Cars. For patient service cars, evaluate the primary inpatient transportation period to determine if patient service elevator cars have excess capacity which can augment passenger elevator cars during peak pedestrian

periods. Under normal operation, all elevators, which operate as a group, have circuitry that monitors cars in operation. When one or more cars are out of service, the monitoring or dispatching system senses the condition and automatically selects an available car within the group for response to hall calls. During an emergency power condition, the ASME A17.1 Code requires all groups of elevators, which are supplied with an alternate power source, to automatically sequence one at a time to the main egress level. Once all cars have reached the designated level, the elevator system must automatically select one car within the group to operate. A manual override switch must also be provided, so emergency personnel may select a particular car if desired.

16-3.2.6 Addition/Alteration Projects. For Addition/Alteration projects, provide specific recommendations on how the addition will augment the existing building systems. Potential migrations from existing buildings, for the purpose of using superior transportation elements in the addition, must be considered in the new building populations.

16-3.2.7 Materials Handling and Logistics Elevators. For materials handling and logistics elevators (manual systems), base the Elevator Traffic Study and Analysis on the materials and cart traffic predicted by the materials management and handling programs, plus 20% spare capacity, during the peak hour, for non-scheduled moves, plus an additional 20% spare capacity to allow for materials handling and materials management program flexibility. In the absence of definitive operational schedules and anticipated commodity delivery criteria from the user service, assume the peak hourly demand for material delivery and non-ambulatory patient traffic to be 10 percent of the combined total daily traffic load for the Elevator Traffic Study and Analysis.

16-3.3 **Escalators**. Consider escalators for pedestrian traffic where justified by traffic studies. Consider escalators for frequent vertical movement of large numbers of people in multi-floor outpatient clinics which exceed 2,000 patient visits per day, or in hospitals which exceed a 500 bed capacity and have principal patient entrances on two levels. Escalators are not subject to analysis or criteria measurements for average intervals. Design escalators to handle large numbers of pedestrians in a safe and efficient manner. Designs shall consider that traffic will include persons who may be slightly impeded by physical disabilities or by virtue of medical / pharmacological treatment. Design escalators with safe travel speeds and adequate entrance and exit queuing areas to handle the expected volumes. The minimum escalator width will be 815 mm (32 inches) and the rated step speed will not exceed 450 mm/second (90 fpm.)

16-4 **ELEVATOR PERFORMANCE CRITERIA**. Elevators provide the basic transportation mechanism for most vertical moves in multistory buildings. Selection of the proper number, type, speed, location and general characteristics for elevators is crucial to an efficient and effective transportation system. Provide the minimum number of elevators necessary that will satisfy the following criteria:

16-4.1 **Average Interval**. Figure 16-2 provides requirements for average intervals for passenger cars, combined use and patient service cab and dedicated materials cars. These average interval times do not specify a particular calculation procedure that should be utilized in ascertaining the desired result (i.e., an acceptable

response time). Base elevator calculations on the areas served. The designer may utilize any suitable calculation procedure provided that all assumptions and logic flow/calculations in the analysis are clearly stated. In addition, the designer will consider loading/unloading time, door operation time, elevator velocities/accelerations and any other parameters that influence the round trip time utilized in the analysis (state all assumptions built into this value.) Alternate systems proposed will be evaluated utilizing a life-cycle-cost analysis.

16-4.2 **Passenger Handling Capacity**. Where the exact peak traffic conditions cannot be obtained or calculated for a given facility, Figure 16-3 may be used.

16-4.3 **Patient Service Handling Capacity**. The 5 minute peak handling capacity for patient service cars, not including materials or logistics traffic, shall be calculated as follows:

a. Total Moves / Day x 18.2% = Peak Hour Moves
b. Peak Hour Moves /12 = Average 5 Minutes
c. Average 5 Minutes x 1.25 = Peak 5 Minute Handling Capacity.

The Elevator Traffic Study and Analysis must detail these moves.

Select passenger elevator systems to provide a 35 second response waiting time interval based on 5 minutes of two way peak period traffic for the facility, assuming a maximum car capacity of 60 percent, that considers the worst case traffic loading scenario, computed using the most accurate of historical/actual traffic data or the projected traffic data/consideration set forth below:

a. Ten percent of the anticipated visitor and staff traffic.
b. Two percent of the anticipated ambulant inpatient traffic.
c. Two percent of the anticipated non-ambulant inpatient traffic.
d. Admissions/discharges based on 20 percent of the inpatient traffic (or a reasonable assumption).
e. Miscellaneous traffic loading not covered by the above factors (state assumptions).

16-4.4 **Other Service Traffic (Materials, Housekeeping, Construction and Maintenance Traffic)**. Peaks for these traffic types shall be calculated in 15- minute intervals, with an allowance of a 5-minute peak representing 40% of the peak 15 minute total. Base studies on the actual total number of materials handling, logistics and housekeeping moves estimated by the materials handling analysis and the materials management report, plus 40% allowance for unscheduled moves and for future schedule flexibility, plus 4% allowance for construction and maintenance traffic.

Hospital service elevator systems will be selected to provide a 45 second response waiting time interval based on the most intense hourly traffic demand anticipated.

Clinic passenger/service elevator systems, either attached to a hospital or freestanding, will be selected to provide transportation to floors above grade at a 40 second response waiting time interval based on a 5 minute peak period for the facility that considers the worst case traffic loading scenario, computed using the most accurate of historical/actual traffic data or the projected traffic data/considerations set forth below:

a. Ten percent of the anticipated visitor and staff traffic.
b. Miscellaneous traffic and material handling traffic data (state assumptions.)
c. For broad planning purposes, including (a) and (b) above a factor of 16.6 percent may be utilized.

16-4.5 **Average Maximum Ride Time (AMRT)**. Figure 16-4 lists the allowable Average Maximum Ride Time.

16-5 ELEVATOR DESIGN CONSIDERATIONS

16-5.1 **Codes**. Elevators shall be designed in accordance with all applicable Federal, State and local codes, including NFPA, “National Electrical Code”, ASME A17.1, A17.2, A17.3 and A17.5 (reference 16a, 16b, 16c, and 16d). This includes designing to the appropriate rating/load classification for the intended application. Elevators shall be designed to meet all UFAS/ADAAG provisions applicable to the project.

16-5.2 **Elevator Types**. Elevator types and speeds shall comply with Figure 16-5. Higher speeds may be used if needed to satisfy traffic demands. Elevator selections will not exceed the elevator rise criteria given in Figure 16-5.

Electric traction elevators may be used for passenger service and hospital service applications.

Hydraulic powered elevators may be considered for use where vertical travel is less than 13.7 m (45 feet), or when overhead clearance is limited. Speed for hydraulic elevators will be minimal in the up direction with full rated loads. Valves that are contained in the pump unit assembly will control hydraulic acceleration, deceleration and leveling.

Hydraulic elevators rated for 80 starts per hour shall be utilized for light duty/light usage applications. Hydraulic elevators rated for 120 starts per hour shall be utilized for heavy duty/heavy usage applications.

16-5.3 **Elevator Location and Travel Distances**.

16-5.3.1 Passenger and Combined Use Elevators. Elevators will be located in direct relationship to major building entrances and convenient to major traffic generating functions such as lobbies. Passenger and combined use elevators shall be planned to provide a maximum walking distance of 61 m (200 ft). A distance of 46 m (150 ft) is preferred.

16-5.3.2 Service Elevators. Service elevators shall be planned to provide a maximum walking distance of 61 m (200 ft) for users on patient floors. A distance of 52 m (170 ft) is preferred.

16-5.3.3 Added Elevators. Where added elevators are provided solely for the purpose of meeting the distances noted above, and where they do not provide primary elevator service to main lobbies and main building ingress/egress points, they are exempted from the standard average interval and handling capacity criteria. Provide average intervals of under 55 seconds and handling capacity equal to 7.5% of the population within the area of service provided. Cars added for this purpose shall be service configured.

16-5.3.4 Materials Handling and Logistics Elevators. Plan materials handling and logistics elevators to provide service as close to the user areas as practical. Primary horizontal circulation should be on one level, where possible. Maximum distances for travel from the elevators to materials storage areas shall not exceed 53 m (175 ft) on inpatient floors and 61 m (200 ft) for all others, except for the primary horizontal circulation floor, where no limit is dictated.

16-5.3.5 Service Elevator Location. Locate elevators so that visitors do not normally pass service or materials cars en route to passenger cars, unless those service cars are substantially hidden from view.

16-5.4 **Elevator Lobbies and Groupings**.

16-5.4.1 Where four or more cars are required within a group, place cars in opposite banks, opening into a common lobby.

16-5.4.2 For service and combined use cars, two in a row are preferred and not more than three in a row should be used; for passenger cars three in a row are preferred and not more than four in a row should be used, as shown in Figures 16-6 and 16-7.

16-5.4.3 If more than six service cars or eight passenger cars are required in one area, provide two smaller, strategic groups.

16-5.4.4 Place adjacent car entrances either in straight lines or in opposite banks to each other as shown in Figures 16-8 and 16-9.

16-5.4.5 Elevator ingress / egress should be from a distinct elevator lobby as shown in Figure 16-10 and not directly from a corridor. Minimum/maximum lobbies for service cars are:

a. 3.66 to 4.27 m (12 to 14 ft) when opening opposes a wall.
b. 4.27 to 4.88 m (14 to 16 ft) when the opening opposes another elevator.

Care should be taken to avoid creating dead end lobbies in excess of life safety requirements. Minimum / maximum lobbies for passenger cars are:

c. 3.05 to 3.66 m (10 to 12 ft) when the opening opposes a wall.
d. 3.66 to 4.27 m (12 to 14 ft) when the opening opposes another elevator.

Where elevators are accessed from corridors, as shown in Figure 16-11, they shall be located on one side of the corridor only (maximum of three cars), and shall be setback:

e. 2.44 m to 3.66 m (8-12 ft) for service and combined use cars.
f. and 1.22 m to 2.44 m (4-8 ft) for passenger cars.

16-5.4.6 Passenger and service cars shall not share the same lobby.

16-5.4.7 Where two or more elevator group lobbies are adjacent, provide walls or other building features to prevent a free flow of traffic between those lobbies (to minimize one user from placing calls to both groups).

16-5.4.8 Elevator lobbies generate noise and must be acoustically isolated from critical care areas.

16-5.4.9 All elevator equipment rooms should be electrically and acoustically isolated to prevent interference with building electronic equipment and objectionable noises. Elevator equipment rooms shall be acoustically separated from critical care and occupied rooms.

16-5.4.10 Hospital type elevator cars shall have interior dimensions that accommodate a patient bed with attendants. Cars shall be at least 1.73 meters (5'-8") wide by 2.74 meters deep (9'-0"). Car doors shall be side opening with a minimum clear opening of 1.22 (4’-0") meters wide and 2.13 meters (7-0") high. In renovations, existing elevators that can accommodate patient beds used in the facility will not be required to be increased in size. Hospital type elevator cars Provide protective cab interior blankets. Wall mounted blankets for interior wall surfaces providing protective coverage from the finished floor to 300 mm (12") below the cab ceiling.

16-6 SYSTEMS DESIGN.

16-6.1 Transportation systems design will consider traffic demand, vertical travel distance, mix of traffic type in the areas to be served, and mode of containerization. Traffic demand and travel distance will determine equipment type and speed required. Traffic mix and mode of containerization will determine load capacity, platform size, configuration and door type.

16-6.2 Figure 16-12 illustrates a typical passenger elevator configuration, and figures 16-13 and 16-14 illustrate the configuration of typical hospital service elevators. Figure 16-13 is similarly applicable to typical clinic elevators. All hospital elevators (passenger and service) must be capable of transporting patient litters.

16-6.3 Front and rear opening hospital service elevators (Figures. 16-15 and 16-16) may be used as swing elevators for both passenger and service traffic when space or budget restrictions limit use of separate passenger elevators.

16-7 TRAFFIC DATA

16-7.1 Types of personnel and materials transactions define the nature of traffic circulating between various health facility departments. The following traffic factors may be used to compute traffic volumes for various traffic types, in lieu of specific direction from the User service.

16-7.2 Pedestrian Traffic Factors.

16-7.2.1 Assume the number of visitors to inpatient areas to average one visitor per inpatient bed per day.

16-7.2.2 Assume the number of professional and administrative staff to be 40 percent of the total facility population. Alternatively, the following ratio can be used: 1 staff for each 2.7 beds. Assume staff elevator trips to be two trips per day, including the total number of staff.

16-7.2.3 Assume ambulatory inpatients to comprise 60 percent of the inpatient census, and this number of inpatients will make 5 elevator trips each day.

16-7.2.4 Assume each clinic patient to have one accompanying person for a total of 2 persons per patient visit.

16-7.3 Nonambulatory patient and materials handling factors.

16-7.3.1 To determine the number for prepared food trays, multiply the number of meals served on all nurse units times the 3 meals served each day. The same dietary carts will be used for collection of soiled trays. The number of food carts will depend on the cart size chosen for a particular installation.

16-7.3.2 One patient nourishment cart will serve all patients on one ward, twice daily. The same cart will be used for collection of soiled nourishment containers.

16-7.3.3 Base linen cart capacity on a factor of 0.06 cubic meters (2 cubic feet) per bed for clean linen delivery, while 0.12 cubic meters (4 cubic feet) per bed is required for soiled linen collection. Limit linen supply carts to 1.2 cubic meters (40 cubic feet) capacity. Soiled linen return carts will depend upon the soiled linen collection system selected.

16-7.3.4 Base the number of sterile reprocessed supply carts on the following factors:

a. Surgery: The average number of surgical procedures per day times 1.2 carts per procedure, plus one backup cart per operating room per day.

b. Delivery: The average number of obstetrical deliveries per day times 1.5 carts per procedure, plus one backup supply cart per delivery room per day.

c. Emergency: The average number of patient visits per day times one cart for each 80 patient visits.

16-7.3.5 The required number of medication carts will be determined as follows:

a. Inpatient bed areas: One cart for each inpatient nursing unit.

b. Surgery and Delivery: The average number of procedures per day times one cart for each 20 procedures.

c. Emergency and Clinics: The average number of patient visits per day times one cart for each 160 patient visits.

16-7.3.6 Non-sterile supply carts will be provided as follows:

a. Inpatient Nursing Units: A volume of 0.05 cubic meters (1.7 cubic feet) of non-sterile supplies will be needed for each bed each day. Each cart will be assumed to be of 0.85 cubic meters (30 cubic feet) capacity.

b. Radiology: One cart for every 300 radiographic procedures for each average day.

c. Laboratory: One cart for every 3,000 laboratory procedures for each average day.

d. Emergency and Clinics: The average number of patient visits per day times 0.06 cubic meters (2 cubic feet) of non-sterile supplies per visit per day.

e. Administration: One non-sterile supply cart for each 100 beds each day.

16-7.3.7 The number of gift and mail carts will be determined as follows:

a. Patient Nursing Units: One cart for every 40 beds each day.

b. Administration: One cart for every 100 beds each day.

16-7.3.8 Housekeeping supplies will require two carts per floor per day.

16-7.3.9 Waste collection factors will be as follows:

a. Inpatient Nursing Units: 0.3 cubic meters (one cubic foot) per bed per day.

b. Surgery and Delivery: One cart for each 20 procedures per average day.

c. Radiology: One cart for each 200 procedures per average day.

d. Laboratory: One cart for each 2,000 determinations per average day.

e. Administration: One cart each day for every 100 beds.

f. Dietary: 0.06 cubic meters (two cubic feet) of dietary waste per bed each day.

g. Emergency and Clinics: The average number of patient visits per day times 0.06 cubic meters (2 cubic feet) of waste supplies per visit per day.

16-7.3.10 Compute inpatient stretcher trips as 40 percent of the average inpatient census times two trips per day.

16-7.3.11 Operation and maintenance activity procedures require 0.2 elevator trips per bed each day.

16-7.3.12 Special equipment supply procedures require one elevator trip per day per floor.

16-7.3.13 Inpatient administration and discharge activity produces elevator traffic equal for 20 percent of the hospital bed capacity times two trips per day.

16-8 PASSENGER AND HOSPITAL SERVICE ELEVATOR FEATURES.

16-8.1 **Operation**. Elevators will be arranged to operate with or without attendants and will be provided with key operated switches for hospital priority service. Each elevator bank will be equipped for emergency operation by means of a key

operated switch at each landing. This switch will cause the closest available car to bypass all other calls in response to an emergency call. Duplex collective operation shall be provided for two-car banks. Three or four car banks shall be group operation. An on-demand microprocessor system shall be provided for all elevator controls.

Controls shall operate properly with a 500 kHz to 1300 MHz radio frequency signal, transmitted at a power level of not less than 100 watts effective radiated power (ERP) at a distance of 0.910 meters (3 feet). The equipment shall be provided with electro-magnetic interference (EMI) shielding within FCC guidelines. Noise level relating to the elevator equipment and its operation shall not exceed 80 dBa in the machine room, measured 0.910 meters (3 feet) above the finished floor and 0.910 meters (3 feet) from the equipment.

16-8.2 **Code Blue Controls**. Provide medical emergency elevator control, sometimes called Code Blue Control, as a means of overriding normal operation of elevators capable of medical emergency transportation of a patient in bed, accompanied by attendants. This control feature will be provided in conjunction with, or in addition to, controls provided for fire department emergency use. Firefighters' operation, as defined in ASME A17.1, shall override Code Blue Control.

16-8.3 **Doors**. Passenger and hospital service elevators will have center opening doors. Two-speed side opening doors may be provided in hospitals, which are equipped with separate material handling systems. Door closing time must comply with ASME code requirements. Minimum door opening speed will be 0.760 meters per second (2-1/2 feet per second) except for high speed elevators 2.54 meters per second (500 fpm) and over where the door opening speed will be 0.760 to 0.910 meters per second (2.5 to 3.0 fps.) Equip hospital service elevators with buttons to extend door open time, adjustable between 0 to 30 seconds. All elevator car doors shall be provided with infrared screen detectors.

16-8.4 **Signals**. Install hall position indicators at the main floor(s) containing the command and outpatient entrances. Provide hall push button stations with call register lights. Install hall lanterns with an audible signal on all elevators. Install car position indicators in each car with floor designations, a floor directory signal and direction arrows. Car operating panels will use car register type floor buttons. Provide a lobby control panel on elevator banks with two or more cars.

16-8.5 **Emergency Power**. Connect elevators to operate on alternate source emergency power in conformance with electric power and lighting criteria. Emergency power selection switches are required for each bank of elevators. The elevator control system will have an automatic transfer switch, which returns each elevator to the main floor, one car at a time. The last car to arrive at the main floor will automatically be selected to operate at normal design speed.

16-8.6 **Machine Rooms**. Locate electric traction elevator machine rooms above elevator hoistways. Size machine rooms to accommodate the maximum space requirements anticipated from competitively bid projects, including adequate space to service the equipment. Provide air conditioning in machine rooms to maintain ambient

temperature below 32 degrees centigrade and above 15 degrees centigrade (below 90 degrees F and above 60 degrees F.) Provide filters to remove dust. Size hydraulic elevator rooms accordingly for the equipment, adjacent or at least within 15 meters (50 feet) of the elevator and should be on the lowest served floor.

16-8.7 **Elevator Car Enclosure**. Car lighting will be either indirect or of the luminous ceiling type. Provide mechanical exhaust for elevator cars.

16-9 MATERIALS HANDLING AND MANAGEMENT SYSTEMS CONSIDERATIONS

16-9.1 **Adjacency Considerations and Handling Considerations**. Figure 16-17 provides a guideline for adjacencies of materials management areas and functions.

16-9.2 **Materials Handling System Alternative Matrix**. The specific systems included in a project shall be determined by detailed physical, functional and economic including life cycle cost studies (LCC). As a minimum, consider the systems noted on Figure 16-17.

16-9.3 **Manual Bulk Handling Systems**. Use manual systems where semi or fully automated systems cannot be physically and economically (LCC) justified. Manual tasks such as pushing, pulling and carrying shall consider safety and human engineering factors. Designs should use general ergonometric standards applicable to "industrial women". Additional criteria for study / application of manual systems include:

16-9.3.1 Movement Loads. The design shall limit the sustained effort to move loaded carts to 10.43 kg (23 lb) pushing force where distances exceed 30.5 m (100 ft), on hard level surfaces. Initial forces required to initiate movement shall not exceed 22.68 kg (50 lb).

16-9.3.2 Movement Speeds. Use the following movement speeds when studying manual and automated alternates:

a. Walking unencumbered, through generally open corridor spaces - 1.32 m/s (260 FPM);
b. Walking while carrying tote box or medium sized parcel under 11.34 kg (25 lb) - 1.07 m/s (210 FPM)
c. Pushing cart through substantially straight and open areas - .89 m/s (175 FPM);
d. Pushing cart through areas that are congested, or where substantial numbers of turns are involved - 0.46 to 0.686 m/s (90 to 135 FPM);
e. Or, as recommended by the MTC based on restrictions of the location.

16-9.4 **Semi-Automatic Bulk Handling Systems**.

16-9.4.1 Elevators. Refer to the paragraphs above.

16-9.4.2 Gravity Chutes. Provide chute access on user levels through a separate room with dimensions adequate for holding the collection cart, with room doors closed, while the attendant is charging the chute. Where both laundry and trash chutes are used, each shall be in a separate and clearly marked room. Size terminal rooms to accumulate the amount of materials dictated by the waste management study. Minimum dimension shall allow accumulation of twenty-four hours of collected materials. Design shall ensure that collected material does not block the entrance door or hinder the pickup operation.

a. Consider gravity chutes, either alone or in combination with horizontal pneumatic chutes, for internal waste transportation in multi-story institutions. Also consider hospital service elevators and cart lifts for internal transportation of solid wastes in multistory buildings.

b. When gravity chute systems are included in multistory facilities, provide one chute system for soiled linen with a separate chute system for waste. Single chute, dual purpose systems will not be used. Separate charging areas, separate enclosure shafts and separate discharge rooms are required, although they may be side by side. Separate collection areas for soiled linen and for solid waste will be located near the loading dock. Bagged solid waste may be manually handled at the bottom of gravity chutes by loading the bags into carts, which are subsequently moved to the disposal point, or it may be automatically discharged into compactors.

c. Design gravity chutes in accordance with NFPA 82. The minimum diameter of gravity rubbish chutes will be 600mm (24 inches.) Chutes must penetrate the roof of the building, be within a fire rated enclosure, be provided with automatic sprinklers, and be charged within a fire-rated room, which is provided with automatic sprinklers. These requirements apply to both soiled linen and solid waste gravity chutes. Chutes are not required to be refractory lines.

d. Vertically aligned charging doors of the same chute system will be interlocked so that only one station can be charged at one time, thereby reducing the possibility of charges jamming within the chute. Provide gravity chutes with negative pressure, relative to the charging area, to eliminate aerosol discharged into the charging areas when charging doors are opened.

e. The concept design analysis will contain basic chute system recommendations.

16-9.4.3 Dumbwaiters, Counter Height. Automatic loading and unloading shall be considered. Dumbwaiters, without automated devices, shall have powered or manual doors. Powered doors shall be vertical lift type and have upper and lower safety edges.

16-9.4.4 Dumbwaiters, Floor Loading. Automatic loading and unloading shall be considered. Floor loading dumbwaiters shall have powered vertical lift bi-parting doors with both upper and lower safety edges.

16-9.4.5 Dumbwaiter Platform Size. Dumbwaiter systems will be limited to a maximum platform size of 0.8 square meters (9 square feet) and maximum capacity of 225 kilograms (500 pounds). A platform size of 680mm x 1200mm (27 by 48 inches) is acceptable. Automatic loading and ejection devices of larger capacity and size, used in conjunction with automatic cart lifts, will conform to the ASME standards for elevators. Determine the dimensions of the car lift platform by the largest cart selected for dietary, linen or other materials distribution.

16-9.4.6 Speeds for automatic cart lifts will be as follows:

Number of Floors	Type of Drives	Rated Speed M/S (fpm)
4 - 5	Geared	1.015 (200)
6 - 9	Geared	1.524 (300)
10 and over	Gearless	2.540 (500)

16-9.4.7 Dumbwaiter and Cart Lift Control. Distribution and Return programs will be provided for dumbwaiter and cart lift operation. The control station will contain a switch from program selection and a series of dispatch buttons that correspond to the floors served. Design the system to permit dispatching carts to any landing from the central dispatching area and to provide for return of carts only to the central dispatching area.

16-9.4.8 Dumbwaiter and Cart Lift Signals. Stations at each floor or landing will contain lights to indicate which program is in effect.

16-9.4.9 Cart lifts with automated transfer devices. Doors shall be power operated with upper and lower safety edges. Maximum cart lift capacity shall be 454 kg (1000 lb).

16-9.5 **Auto Guided Vehicle System - Vertical Automation**. Systems designed for vertical-only transportation of materials on carts shall use elevators, guide path, and other devices, as applicable. Designs shall consider future upgrade to allow horizontal travel.

16-9.6 **Automated Horizontal and Vertical Bulk Handling Systems**. Automated cart transportation systems may be used where LCC justified for horizontal and vertical transportation of materials.

16-9.6.1 Automated Guided Vehicle Systems. Automated Guided Vehicle Systems shall be an integrated turnkey automated cart transportation system. Design the Automated Guided Vehicle Systems to incorporate the latest state of the art in proven technology; systems not proven in previous applications shall be avoided. Automated

Guided Vehicle Systems may utilize a variety of transportation vehicles including "cart carrying" type, forklift type, tow type, and Automated Storage and Retrieval System type.

Consider the use of automatic cart systems for material distribution provided the use of automated equipment can reduce the number of service elevators required and the installation can be justified on a cost effective basis. An increase in construction cost must be justified by a corresponding decrease in operating or other life-cycle, cost, through reduction of manpower needs, reduced energy consumption, or improved service to patients.

16-9.6.2 Other Automated systems. Other Automated Vertical and Horizontal Cart transportation systems may be reviewed where applicable and cost effective for a given project.

16-9.6.3 Pneumatic Trash / Linen. Pneumatic Trash / Linen shall be fully pneumatic, gravity pneumatic or multi-loading. Hybrid systems are permitted where required. In general, no station shall be designed that is "up-send" in nature. All materials should travel in the down direction after first being loaded into the system. Verify system traffic capabilities by detailed traffic studies.

a. Gravity-pneumatic systems, a combination of gravity chutes for vertical transportation and pneumatic chutes for horizontal transportation, are subject to the same fire protection requirements as gravity systems.

b. In composite systems, the gravity chute will be equipped with a storage section at the bottom of the chute. Gravity chute charging stations equipped with electric control systems may be loaded with as many bags of waste or linen as necessary. Bags are accumulated in the storage section and are removed as a single load on demand.

c. Fully automatic chute systems containing both horizontal and vertical elements, with automatic transfer systems, are not normally allowed in health facilities. Where a vertical rise is required for a pneumatic chute intended as a collector for gravity chutes, the vertical rise must be installed in a fire-rated enclosure in accordance with NFPA 82.

d. If horizontal pneumatic chutes must be manually charged, enclose charging doors and frames in fire-rated rooms. Sprinklers in the charging stations must protect pneumatic chutes. Charging stations will have a receiving compartment with an outer and inner door. When the door is opened to put in a load, the inner door will be automatically locked so that the load cannot freely enter the chute. When the outer door is closed, the inner door will open in its sequential turn and the load will be automatically transported by negative pressure to its point of discharge. Only one load will move through each leg of a pneumatic chute system at one time.

16-9.7 **Unit Handling Systems**.

16-9.7.1 Manual Systems. Use manual systems where semi, or fully automated systems cannot be functionally, physically or economically (LCC) justified.

16-9.7.2 Pneumatic Tubes. Pneumatic tube systems may be provided where economically justified. Design systems to reach individual project peak traffic requirements, plus a minimum spare capacity of 20%. Designs shall provide for soft handling of all systems where laboratory specimens and other delicate items are transmitted. No specific correlation can be made between the number of beds in a health facility and the need for a pneumatic tube system. Provision of pneumatic systems must be consistent with requirements for a particular health facility regardless of the size of the facility. Select tube systems which provide automatic control of carrier movement. A selector device which permits correspondence with any station served by the system will set destination of the carrier.

16-9.7.3 Automated Box Conveyors. Automated Box Conveyors systems may be provided when economically (LCC) justified. Design systems to serve peak traffic requirements plus a minimum spare capacity of 35%. Selective vertical conveyors may be used to transport boxes approximately 400 mm wide x 1800 mm long x 200 mm deep (16 inches wide by 22 inches long by 8-1/2 inches deep). Box conveyors are suitable for transporting materials such as pharmaceuticals, sterile supplies, medical records, x-ray film and patient utensils. Conveyor systems are normally ratted at 8 boxes per minute. For large health facilities utilizing integrated materials handling methods, automatic loading an unloading cart lifts are considered more efficient than box conveyors.

a. The vertical element of a conveyor system will be equipped to load and unload automatically. The control stations will be capable of dispatching tote boxes to any landing or floor level in the building. Conveyors and branch lifts will be capable of transporting materials horizontally to remote stations.

b. Carrier tote boxes will be furnished with covers and will be coded to identify the type of material transported.

CHARACTERISTICS:	FACILITY TYPE:			
SIZE/HEIGHT OF BUILDING OR NUMBER OF BEDS OR NUMBER OF OUTPATIENT VISITS PER YEAR	TROOP AID CLINIC	MEDICAL AND OR DENTAL CLINIC	RESEARCH & GENERAL LAB BLDGS.	HOSPITAL
LESS THAN 4,640 GSM (50,000 GSF) OR 2 LEVELS OR LESS THAN 50 BEDS OR LESS THAN 15,000 OUTPATIENT VISITS/YR.	COMBINE ALL ELEVATORS	COMBINE ALL ELEVATORS	COMBINE ALL ELEVATORS	COMBINE ALL ELEVATORS
GREATER THAN 4,640 GSM (50,000 GSF) AND LESS THAN 9,2900 GSM (100,000 GSF) OR GREATER THAN 2 LEVELS OR GREATER THAN 50 BEDS AND LESS THAN 100 OR GREATER THAN 15,000 OUTPATIENT VISITS/YR AND LESS THAN 75,000 OUTPATIENT VISITS/YR.	NOT APPLICABLE	COMBINE ALL ELEVATORS OR SEPARATE PASSENGER AND SERVICE	COMBINE ALL ELEVATORS OR SEPARATE PASSENGER AND SERVICE	SEPARATE VISITOR/ OUTPATIENT TRAFFIC. SEPARATE INPATIENT/ LOGISTICS/ MATERIALS TRAFFIC.
GREATER THAN 9,290 GSM (100,000 GSF) AND LESS THAN 18,580 GSM (200,000 GSF) OR GREATER THAN 3 LEVELS OR GREATER THAN 100 BEDS AND LESS THAN 150 OR GREATER THAN 75,000 OUTPATIENT VISITS/YR AND LESS THAN 150,000 OUTPATIENT VISITS/YR.	NOT APPLICABLE	COMBINE ALL ELEVATORS OR SEPARATE PASSENGER AND SERVICE	SEPARATE PEDESTRIAN TRAFFIC. COMBINE LOGISTICS/ MATERIALS TRAFFIC.	SEPARATE VISITOR/ OUTPATIENT TRAFFIC. SEPARATE INPATIENT/ LOGISTICS/ MATERIALS TRAFFIC.
GREATER THAN 18,580 GSM (200,000 GSF) OR GREATER THAN 4 LEVELS OR GREATER THAN 150 BEDS OR GREATER THAN 150,000 OUTPATIENT VISITS/YR.	NOT APPLICABLE	SEPARATE VISITOR/ PATIENT TRAFFIC. SEPARATE LOGISTICS/ MATERIALS TRAFFIC.	SEPARATE PEDESTRIAN TRAFFIC. COMBINE LOGISTICS/ MATERIALS TRAFFIC.	SEPARATE VISITOR/ OUTPATIENT TRAFFIC. SEPARATE INPATIENT TRAFFIC. SEPARATE LOGISTICS/ MATERIALS TRAFFIC.

NOTES:

1. WAREHOUSES SHALL SEPARATE VISITOR TRAFFIC FROM ALL OTHER TRAFFIC.
2. WHERE A FACILITY MEETS CHARACTERISTICS IN MORE THAN ONE ROW, THE MORE SEVERE SEPARATION SHALL APPLY.

Figure 16-1. Elevator Traffic Separation Guide

FACILITY TYPE	PASSENGER CARS	COMBINE USE AND PATIENT SERVICE CARS	DEDICATED MATERIALS CARS (MANUAL SYSTEMS)
WAREHOUSE	LESS THAN 50 SECONDS	NOT APPLICABLE	LESS THAN 60 SECONDS
TROOP AID STATION	LESS THAN 45 SECONDS	LESS THAN 50 SECONDS	LESS THAN 60 SECONDS
MEDICAL AND OR DENTAL CLINIC	LESS THAN 40 SECONDS	LESS THAN 45 SECONDS	LESS THAN 55 SECONDS
RESEARCH LABS	LESS THAN 45 SECONDS	LESS THAN 50 SECONDS	LESS THAN 55 SECONDS
HOSPITALS	LESS THAN 35 SECONDS	LESS THAN 40 SECONDS	LESS THAN 50 SECONDS

Figure 16-2. Average Interval Performance Standards
5 Minutes of Heavy 2-Way Traffic
Typical Facility

FACILITY TYPE	PERCENT OF ELEVATOR POPULATION HANDLED MINIMUM ACCEPTABLE, SEE NOTES 1 AND 2
WAREHOUSES, STAND ALONE	11%
TROOP AID STATION, STAND ALONE	12%
MEDICAL AND OR DENTAL CLINIC, STAND ALONE	13%
RESEARCH LAB BUILDINGS, STAND ALONE	13%
HOSPITALS, MEDICAL CENTERS	15%

NOTES FOR FIGURE 17.3:
1. WHERE COMBINED/INTEGRATED WITH ANOTHER FACILITY TYPE, THE HIGHER FACILITY CAPACITY SHALL BE MET.
2. WHERE MORE THAN ONE ELEVATOR GROUP EXISTS, A 10% (MINIMUM) MIGRATION FACTOR SHOULD BE INCLUDED FOR EACH GROUP.

Figure 16-3. Passenger Handling Capacity
5 Minutes of Heavy 2-Way Traffic
Typical Facility

FACILITY TYPE	AVERAGE MAXIMUM RIDE TIME
WAREHOUSES, STAND ALONE	LESS THAN 120 SECONDS, ALL TRAFFIC
TROOP AID STATION	LESS THAN 90 SECONDS, ALL TRAFFIC
MEDIAL AND OR DENTAL CLINIC, STAND ALONE	LESS THAN 90 SECONDS, ALL TRAFFIC
RESEARCH/LAB BUILDINGS, STAND ALONE	LESS THAN 90 SECONDS, ALL TRAFFIC
HOSPITALS, MEDICAL CENTERS	LESS THAN 90 SECONDS, PASSENGER/PATENT ELEVATORS LESS THAN 120 SECONDS, LOGISTICS ELEVATORS

Figure 16-4. Average Maximum Ride Time

ELEVATOR RISE		SPEED M/S (FPM); FULL LOAD UP, NO LOAD DOWN; BY ELEVATOR TYPE		
STOPS	HEIGHT M (FT)	HYDRAULIC	GEARED	GEARLESS
2	< 4.6 (15)	.635 (125)	NOT APPLICABLE	NOT APPLICABLE
3	4.6 (15) TO 13.7 (45)	.635 (125 MIN.)	NOT APPLICABLE	NOT APPLICABLE
4 TO 7	< 27.4 (90)	NOT APPLICABLE	1.015 (200)	2.54 (500)
			1.780 (350)	
7 TO 17	27.4. (90) TO 54.9 (180)	NOT APPLICABLE	1.780 (350)	2.54 (500)
				3.56 (700)
> 17	> 54.9 (180)	NOT APPLICABLE	SEE NOTE 1	SEE NOTE 1

NOTES FOR TABLE 17.5:
1. CONSIDER SEPARATE HIGH RISE AND LOW RISE GROUPS OF PASSENGER CARS.

Figure 16-5. Elevator Types and Speeds

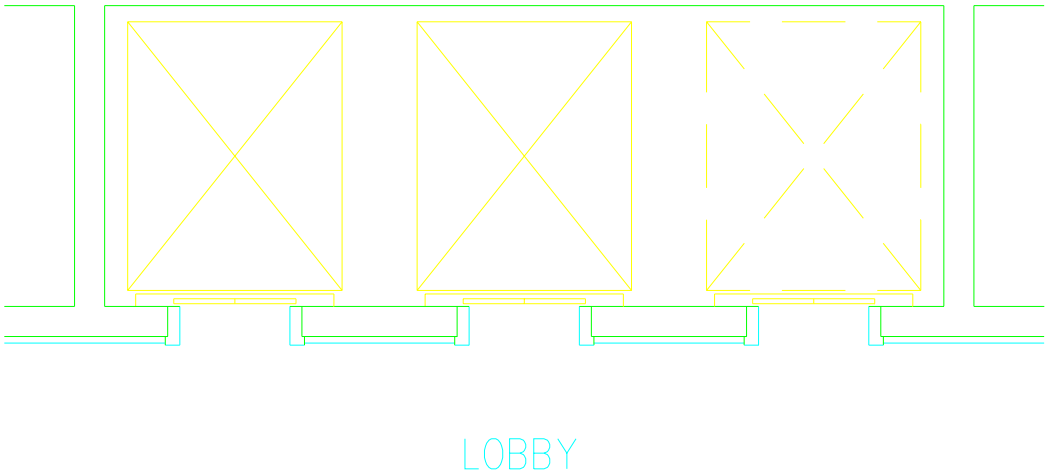

Figure 16-6. Service Cars – In Line

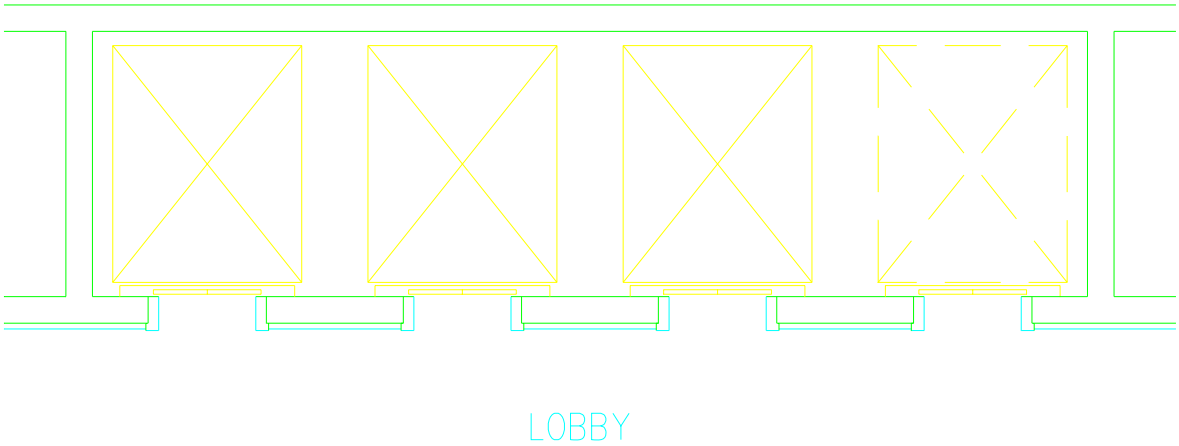

Figure 16-7. Passenger Cars – In Line

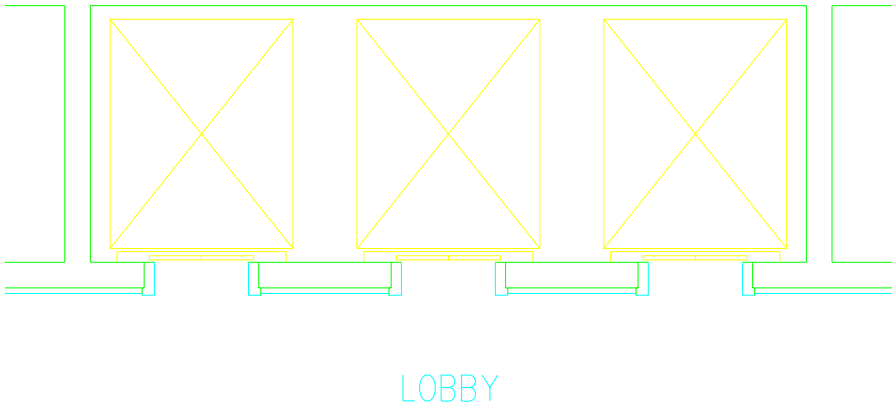

Figure 16-8. Adjacent Entrances – In Line

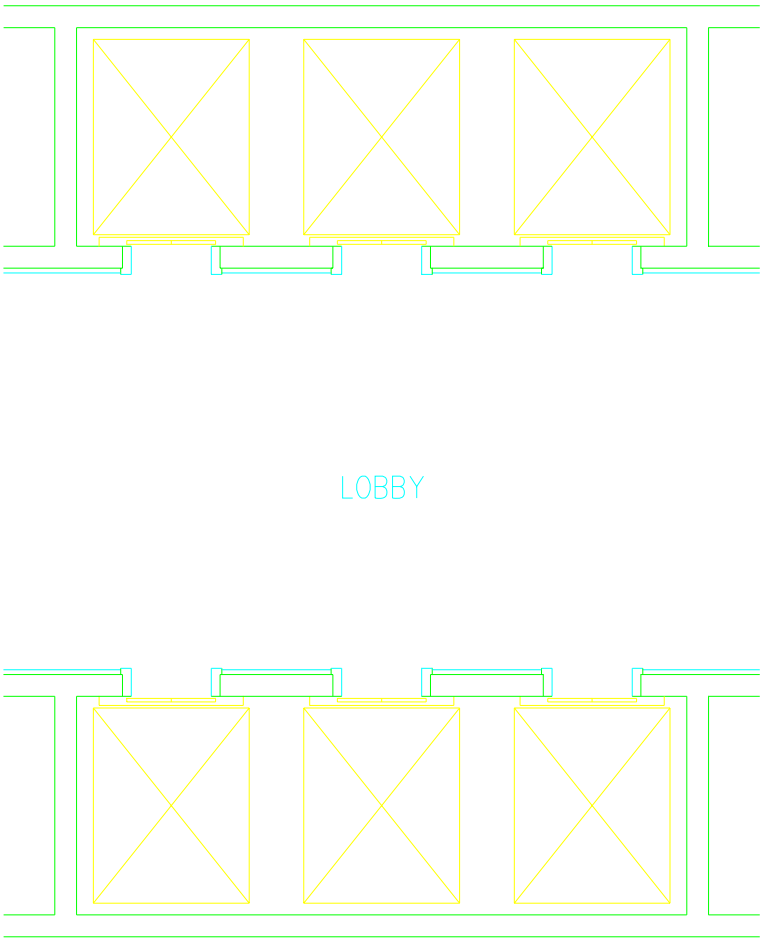

Figure 16-9. Adjacent Entrances – 180 Degrees (Opposing)

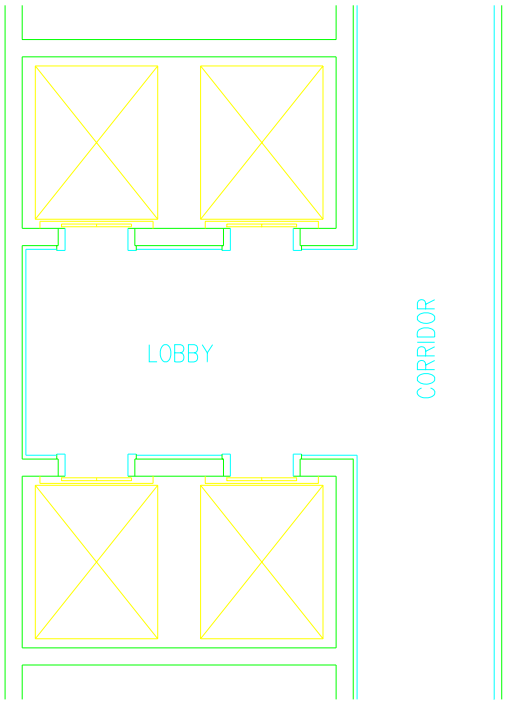

Figure 16-10. Elevator with Lobby Alcove

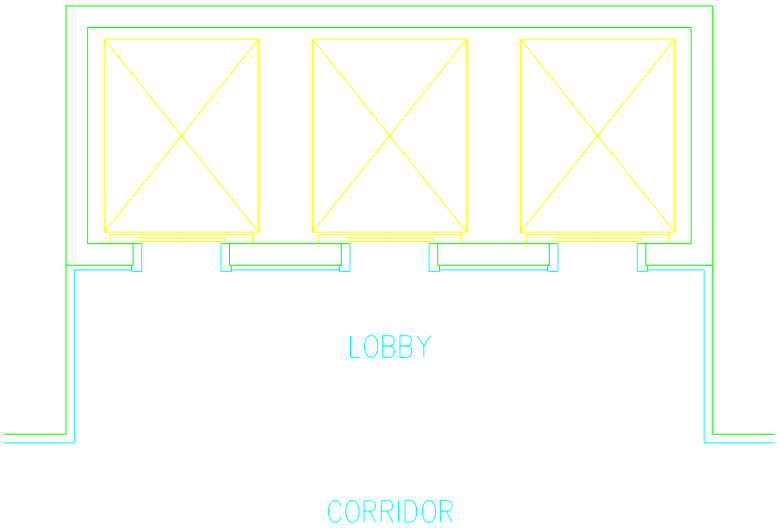

Figure 16-11. Elevator with Lobby Setback

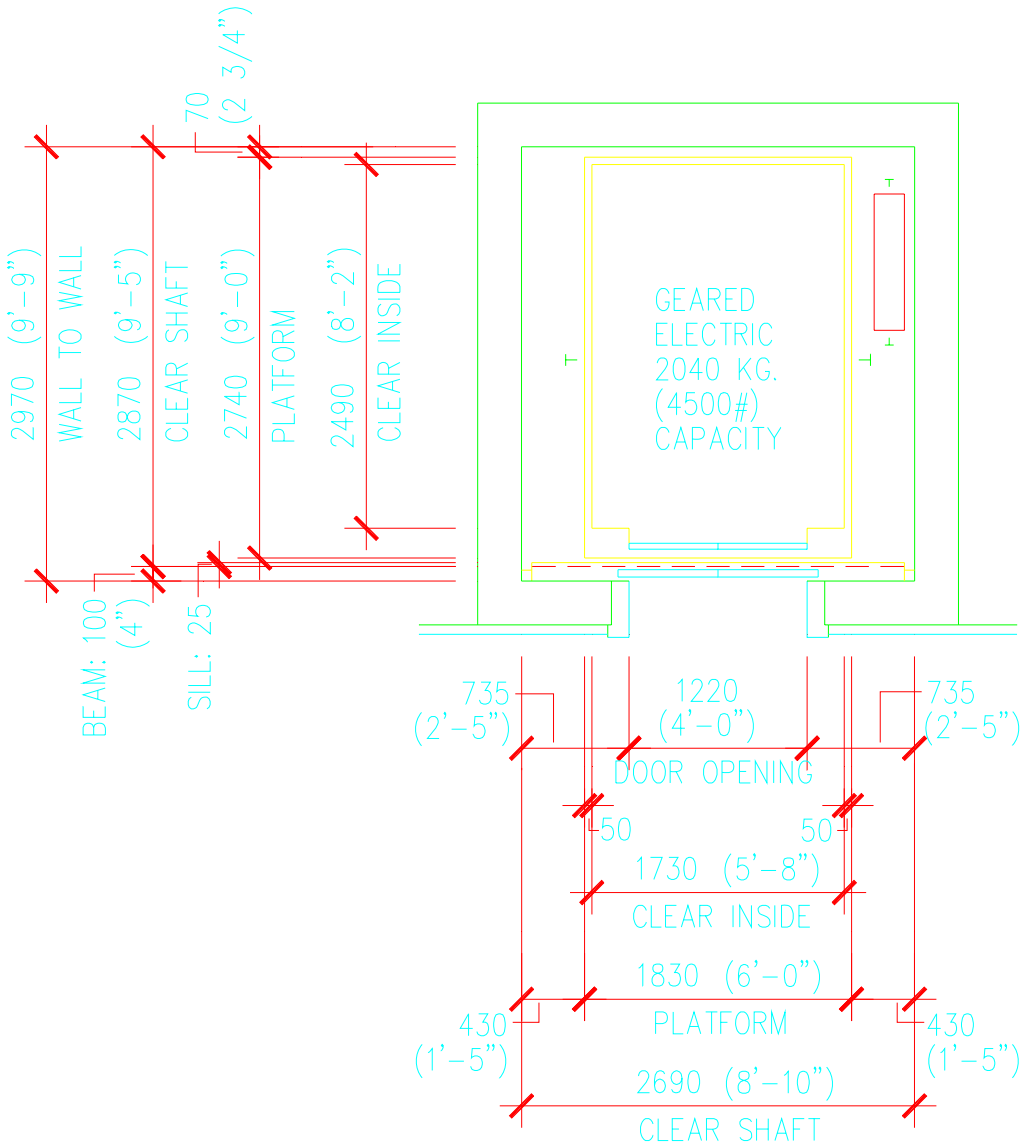

Figure 16-12. Passenger Elevator – (Non Seismic)

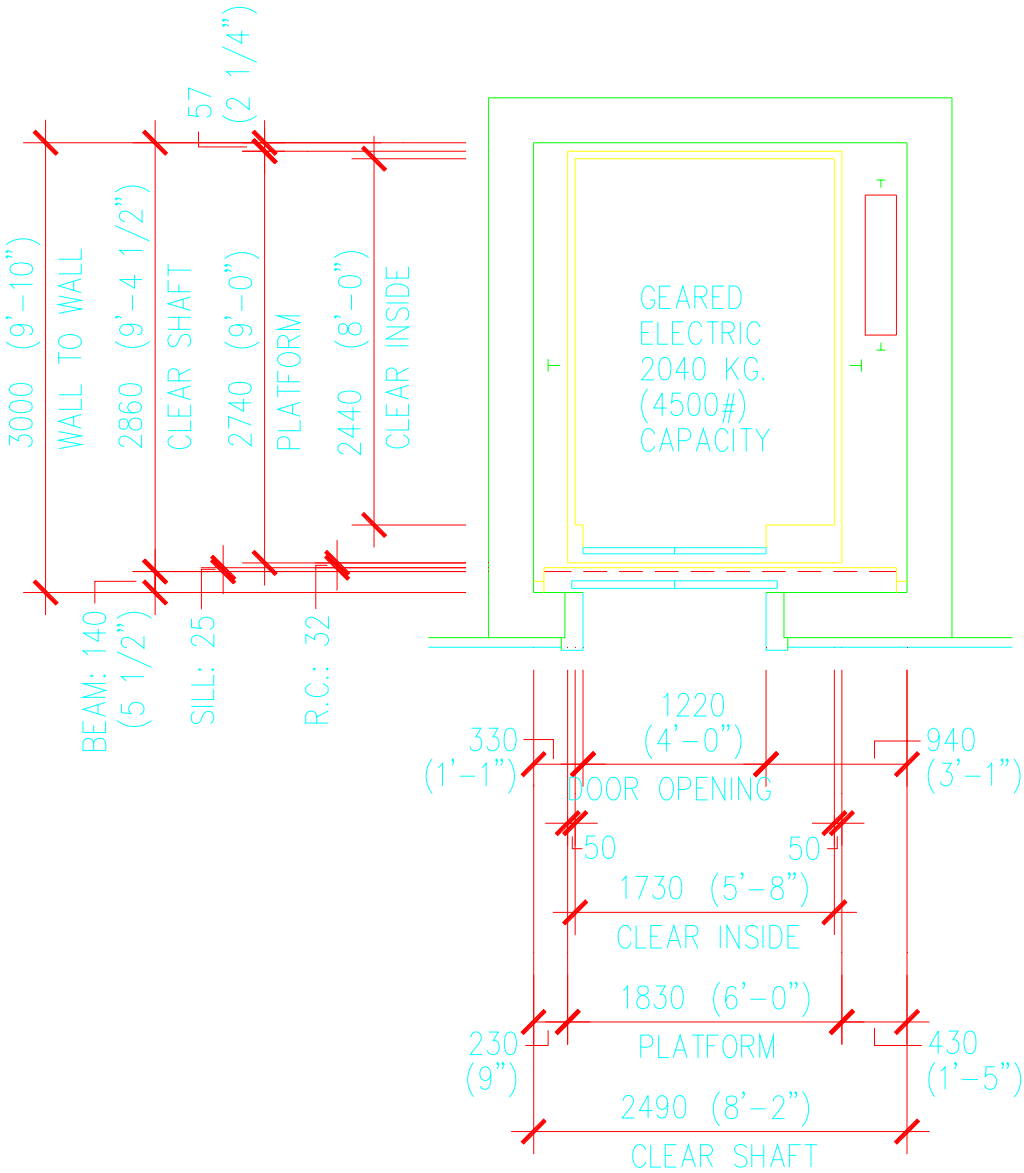

Figure 16-3. Hospital Service/Passenger Elevator with Center Opening Doors (Non Seismic)

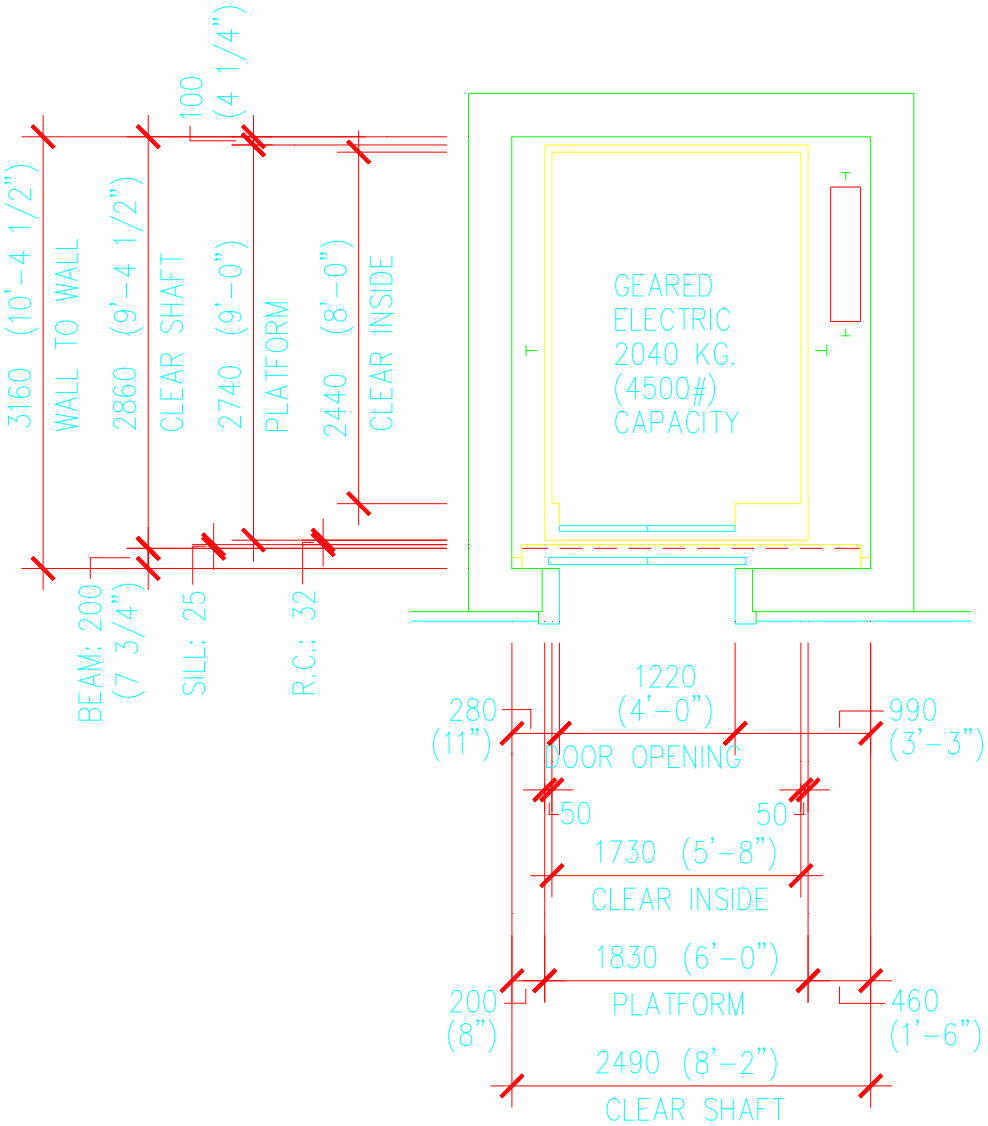

Figure 16-14. Hospital Service Elevator Two Speed Side Opening Doors (Non Seismic)

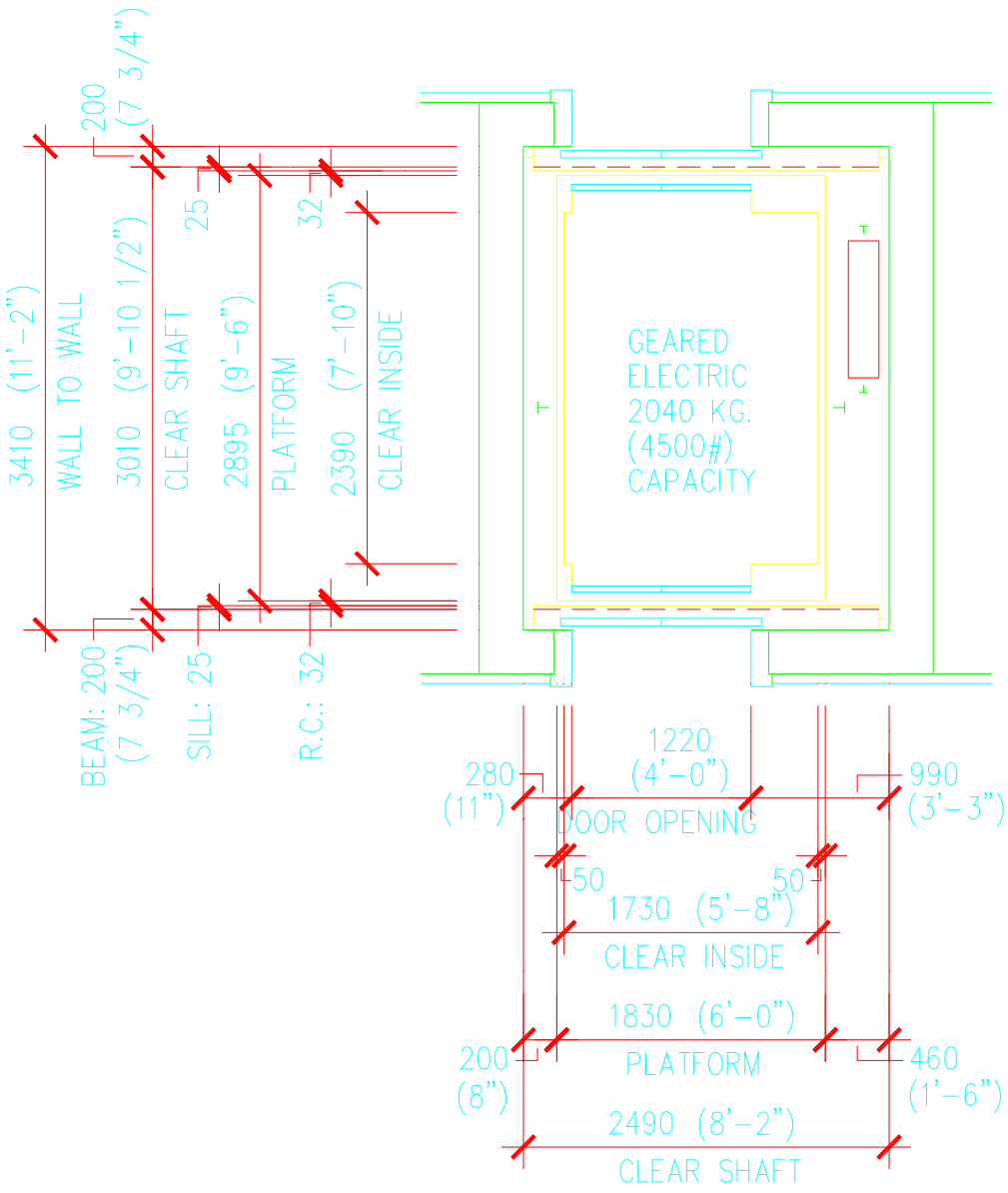

Figure 16-15. Hospital Combination Passenger and Service Elevator Center Opening Doors, Front and Rear (Non Seismic)

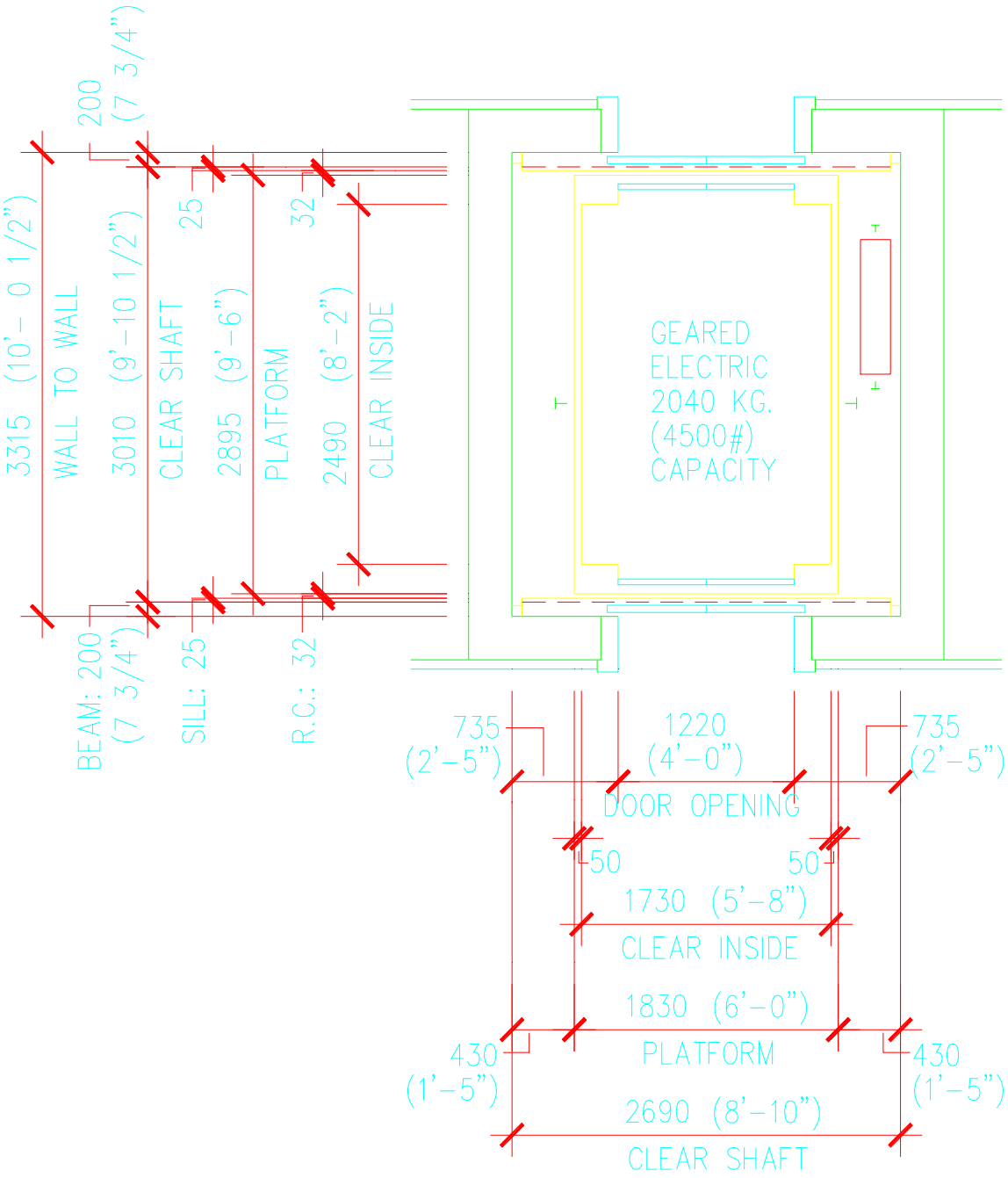

Figure 16-16. Hospital Combination Passenger and Service Elevator Center Opening Doors, Front and Rear (Non-Seismic)

CHARACTERISTICS:	FACILITY TYPE:			
SIZE/HEIGHT OF BUILDING OR NUMBER OF BEDS OR NUMBER OF OUTPATIENT VISITS PER YEAR	TROOP AID CLINIC	DENTAL/ OUTPATIENT CLINIC	RESEARCH & GENERAL LAB BLDGS.	HOSPITAL
LESS THAN 4,640 GSM (50,000 GSF) OR 2 LEVELS OR LESS THAN 50 BEDS OR LESS THAN 15,000 OUTPATIENT VISITS/YR.	NO STUDY REQUIRED.	NO STUDY REQUIRED.	NO STUDY REQUIRED. MANUAL DUMBWAITER.	NO STUDY REQUIRED. MANUAL DUMBWAITER.
GREATER THAN 4,640 GSM (50,000 GSF) AND LESS THAN 9,2900 GSM (100,000 GSF) OR GREATER THAN 2 LEVELS OR GREATER THAN 50 BEDS AND LESS THAN 100 OR GREATER THAN 15,000 OUTPATIENT VISITS/YR AND LESS THAN 75,000 OUTPATIENT VISITS/YR.	NOT APPLICABLE	NO STUDY REQUIRED. MANUAL DUMBWAITER.	NO STUDY REQUIRED. MANUAL DUMBWAITER. PNEUMATIC TUBE - INJECT/EJECT.	STUDY TWO ALTERNATES. MANUAL DUMBWAITER. PNEUMATIC TUBE - INJECT/EJECT. GRAV. CHUTES
GREATER THAN 9,290 GSM (100,000 GSF) AND LESS THAN 18,580 GSM (200,000 GSF) OR GREATER THAN 3 LEVELS OR GREATER THAN 100 BEDS AND LESS THAN 150 OR GREATER THAN 75,000 OUTPATIENT VISITS/YR AND LESS THAN 150,000 OUTPATIENT VISITS/YR.	NOT APPLICABLE	STUDY TWO ALTERNATES. MANUAL DUMBWAITER. PNEUMATIC TUBE - INJECT/EJECT.	STUDY TWO ALTERNATES. MANUAL DUMBWAITER. PNEUMATIC TUBE - INJECT/EJECT.	STUDY THREE ALTERNATES. MANUAL DUMBWAITER. PNEUMATIC TUBE - INJECT/EJECT. AUTO CART LIFT GRAVITY CHUTE
GREATER THAN 18,580 GSM (200,000 GSF) AND LESS THAN 32,520 GSM (350,000 GSF) OR GREATER THAN 4 LEVELS OR GREATER THAN 150 BEDS AND LESS THAN 250 OR GREATER THAN 150,000 OUTPATIENT VISITS/YR. AND LESS THAN 300,000 OUTPATIENT VISITS/YR.	NOT APPLICABLE	STUDY TWO ALTERNATES. MANUAL DUMBWAITER. PNEUMATIC TUBE - INJECT/EJECT. AUTO CART LIFT AUTO BOX CONVEYOR GRAVITY CHUTE	STUDY TWO ALTERNATES. MANUAL DUMBWAITER. PNEUMATIC TUBE - INJECT/EJECT. AUTO CART LIFT AUTO BOX CONVEYOR GRAVITY CHUTE	STUDY THREE ALTERNATES. MANUAL DUMBWAITER. PNEUMATIC TUBE - INJECT/EJECT. AUTO CART LIFT AUTO BOX CONVEYOR GRAVITY CHUTE PNEUM. TRASH/LINEN

Figure 16-17. Materials Handling System Alternative Matrix
(Continued Next Page)

CHARACTERISTICS:	FACILITY TYPE:			
SIZE/HEIGHT OF BUILDING OR NUMBER OF BEDS OR NUMBER OF OUTPATIENT VISITS PER YEAR	TROOP AID CLINIC	DENTAL/ OUTPATIENT CLINIC	RESEARCH & GENERAL LAB BLDGS.	HOSPITAL
GREATER THAN 32,520 GSM (350,000 GSF) OR GREATER THAN 6 LEVELS OR GREATER THAN 250 BEDS OR GREATER THAN 300,000 OUTPATIENT VISITS/YR.	NOT APPLICABLE	STUDY THREE ALTERNATES. MANUAL DUMBWAITER. PNEUMATIC TUBE - INJECT/EJECT. AUTO CART LIFT AUTO BOX CONVEYOR GRAVITY CHUTE PNEUM. TRASH/LINEN AUTO GUIDED VEHICLE	STUDY THREE ALTERNATES. MANUAL DUMBWAITER. PNEUMATIC TUBE - INJECT/EJECT. AUTO CART LIFT AUTO BOX CONVEYOR GRAVITY CHUTE PNEUM. TRASH/LINEN AUTO GUIDED VEHICLE	STUDY THREE ALTERNATES. MANUAL DUMBWAITER. PNEUMATIC TUBE - INJECT/EJECT. AUTO CART LIFT AUTO BOX CONVEYOR GRAVITY CHUTE PNEUM. TRASH/LINEN AUTO GUIDED VEHICLE

NOTES:
1. WAREHOUSES SHALL BE STUDIED FOR APPLICABLE EQUIPMENT AND FOR EXTENSIONS OF SYSTEMS FROM ADJACENT FACILITIES.
2. OTHER SYSTEMS MAY BE STUDIED WHERE APPROPRIATE.

Figure 16-17. Materials Handling System Alternative Matrix

REFERENCES

16a. ASME A17.1, "Safety Code for Elevators and Escalators".

16b. ASME A17.2.1, A17.2.2, A17.2.3, "Inspectors Manuals".

16c. ASME A17.3, "Safety Code for Existing Elevators and Escalators".

16d. ASME A17.5, "Elevator and Escalator Electrical Equipment".

16e. NFPA 82, "Standard on Incinerators and Waste and Linen Handling Systems and Equipment".

SECTION 17

WASTE MANAGEMENT

17-1 **INTRODUCTION**. This section addresses the waste generated at DOD medical facilities, and establishes design guidance for the collection, transportation, holding, disposal, and treatment of these wastes. Wastes not addressed by this section include asbestos, nuclear, and water-borne (sanitary) wastes. This section discusses, but does not provide complete facility design guidance for, soiled reprocessable materials, such as linens, uniforms, etc.

17-1.1 **Regulations, Codes, and Standards**. The design of the waste management system shall be in accordance with the Federal regulations listed in the references (17a through 17g) at the end of this section. In addition, the design shall be in accordance with State and local government regulations. Guidelines and advisory standards available from the National Fire Protection Agency (NFPA), the Centers for Disease Control (CDC), National Institute for Occupational Safety and Health, (NIOSH), Department of Health and Human Services (HHS), and the Joint Commission on Accreditation of Healthcare Organizations (JCAHO), shall be utilized as applicable and considered minimum criteria for facility design. Specific publications of these agencies are cited periodically throughout this text to emphasize applicability. Waste management study based on regulations and standards enforced at the local authority.

REFERENCES

17a. Environmental Protection Agency (EPA) Regulation 40 CFR 261-265 implementing the Resource Conservation and Recovery Act (RCRA), 42 USC 6973.

17b. EPA Regulation 40 CFR Parts 22 and 259, the Medical Waste Tracking Act.

17c. Department of Transportation (DOT) Regulation 49 CFR 171-181, Hazardous Materials Transportation.

17d. DOT Regulation 49 CFR 173.386, The Etiologic Waste Act (EWA).

17e. Occupational Health and Safety Administration (OSHA) Regulation 29 CFR 1910.1200.

17f. OSHA Regulation 29 CFR 1910.134.

17g. OSHA Regulation 29 CFR 1910.1030.

SECTION 18

CONSTRUCTION

18-1 **GENERAL**. The Construction Agents have the responsibility to administer and manage all aspects of construction in accordance with the final plans and specifications. The Tricare Management Activity has the overall fiscal responsibility for the medical MILCON and the O&M programs. The Surgeon General's Health Facilities personnel for the respective Military Departments are responsible for ensuring compliance with medical functional standards and requirements during construction, for providing assistance and liaison between the medical community and the Construction Agent, and for providing continuity from planning and design through beneficial occupancy for each project.

18-2 **ADVERTISING**. TMA will provide authority to the Design Agent to advertise the construction contract upon receipt of a certification that the design is complete, it complies with the approved concept design, and provides a copy of the validated Current Working Estimate (CWE) indicating the base bid, options and any proposed additive bid items. A copy of this information will also be provided to the using Military Service. Authority to early advertise will be granted subject to availability of funds.

18-3 **CONTRACT AWARD**. TMA will provide authority to the Design Agent to award a construction contract upon receipt of a written award request and a current working estimate in DD Form 1391 detail if the low bid CWE is less than or equal to the authorized Programmed Amount (PA) or authorized by TMA. If the low base bid CWE exceeds the current PA, the Construction Agent after consulting with the using Service, will provide recommendations and options available to TMA-PPMD regarding disposition of the bid results. Recommendations will include any possible measures that would allow construction contract award within the current PA/or funds available.

18-3.1 **Bid Opening Report**. The Construction Agent will utilize the bid opening report to develop the government approved CWE. The CWE will identify all project cost data including the contractor bid amounts (base bid plus additives) and all other non-contractor cost data which will form the basis of the recommended award CWE.

18-4 **CONSTRUCTION CHANGE ORDERS**.

18-4.1 **Criteria and System Changes**. Changes that alter system designs, life safety features, or change functional requirements must be submitted to the Medical Facilities Design Office (Navy) or Corps of Engineers as appropriate, and the using Military Department representative prior to approval and incorporation.

18-4.2 **TMA-PPMD Approval**. TMA-PPMD must approve all changes that add significant new features to the project, which were not originally contemplated in the design. All non-mandatory change orders with cost estimates in excess of $100,000, must be reported to the TMA-PPMD. These proposed changes will be coordinated thru theHQUSACE (CEMP-M) and HQNAVFAC (MFDO) prior to submission to TMA-PPMD.

18-5 **CONSTRUCTION FUNDS**.

18-5.1 **Funds Management**. TMA-PPMD will sub-allocate all of the apportioned design and construction funds to the respective Design/Construction Agents. The Agent will manage the funds at the project level.

18-5.2 **Reporting**. The HQUSACE (CEMP-M) medical program manager, NAVFACHQ (MFDO) will provide a quarterly report with the status of funds to the TMA-PPMD and the using Military Department. The report shall include the usage of all construction funds and obligations. The accounting of the construction funds usage should also include Engineering and Design during Construction (EDC) obligations, as applicable.

18-5.3 **Funds Availability**. If funds are required for changes that exceed the amount available and the management reserve account is inadequate, the Construction Agent will notify and request additional funds from TMA-PPMD in writing along with justification for additional contingency funds and/or source of funds as appropriate.

18-6 **INSTALLED EQUIPMENT (CATEGORY E AND F)**.

18-6.1 **Funds Management**. The Construction Agent will sub-allocate funds required to procure this equipment as determined by the using Military Department up to the amount shown on the DD Form 1391 and as reflected in the equipment list as Category E and F.

18-6.2 **TMA Notification**. The Construction Agent shall notify TMA-PPMD if actual requirements exceed the apportioned amount.

18-7 **CONTRACTOR CLAIMS**.

18-7.1 **TMA Notification**. The Construction Agent will notify TMA-PPMD and the Military Department of submitted contractor claims that have been approved by the Contracting Officer or the Board of Contract Appeals within 30 working days of date of the determination to reimburse the contractor, for claims in excess of $100,000.

18-7.2 **Reporting**. Such claims will be accompanied with a narrative explanation and assessment of the claim's merit, recommended resolution, estimated final cost, and whether or not sufficient contingency funds are available to make the payment.

18-7.3 **TMA Authority**. The TMA-PPMD is responsible for monitoring fiscal compliance with the Public Law that provided Military Construction authorization. The Construction Agent is responsible for keeping TMA-PPMD apprised of any field decision or change order request with merit, which may exceed the Public Law and require a Congressional cost variation notification.

18-8 **MILCON FUNDS STATUS REPORT.** The information for each project should consist of the following information, as a minimum:

18-8.1 Title and location

18-8.2 Using Military Department

18-8.3 Program Amount (PA)

18-8.4 Amount of Medical MILCON funds sub-allocated for the project

18-8.5 Estimated award Current Working Estimate (CWE) for projects which have not yet reached bid opening date

18-8.6 Actual award CWE for awarded projects

18-8.7 Scheduled and Actual percentage construction completion, as applicable.

18-9 **POST-OCCUPANCY EVALUATION (POE)**. The Military Departments and/or design agents will determine the need to conduct Post-Occupancy Evaluations of new facilities and periodic on-site visits to all other facilities.

18-10 **JCAHO STATEMENT OF CONDITIONS**. The Construction Agent will provide an updated Statement of Conditions (SOC) for the Joint Commission on Accreditation of Healthcare Occupancies (JCAHO) Environment of Care Standards for certification purposes, at the completion of construction. The designer of record will complete the SOC and the Construction Agent will provide copies to the using Military Department and the medical facility.

SECTION 19

WAYFINDING AND SIGNAGE

19-1 **GENERAL**. Wayfinding and signage shall be included per UFAS/ADAAG and the military installation guidelines extending from the site boundary of a Medical Treatment Facility (MTF) to an individual room designation.

19-2 **EXTERIOR SIGNS**. Signs providing direction from around the military installation to the Medical Treatment Facility (MTF) site and back to major roads are part of the overall installation sign plan and generally not included within the Military Construction (MILCON) project. All signs located on the (MTF) site shall be included in the (MILCON) project.

19-2.1 Keep the number of directional signs and the information presented on each sign to a minimum, to prevent confusion. Begin directional signs for commonly used major services at campus boundaries and guide a person through decision points to the parking area nearest to the entrance needed. Building entrance signs must be visible from that point. Group the information with left-pointing arrows at the top, up-pointing arrows next, and right-pointing arrows at bottom. Always place the EMERGENCY sign at the top of a directional signage group. Provide EMERGENCY directional signage at each entry drive to the medical facility campus. All EMERGENCY signage shall be on emergency power.

19-2.3 Provide building entrance identification signs for each major entrance to a facility. The sign shall describe the purpose of the entrance, that is, Main Entrance, Clinic Entrance, Dental Clinic, or other specific activity intended to be reached by the public primarily through that entrance. See Section 9 for lighted exterior signs. The EMERGENCY entrance must be marked by an internally illuminated sign in accordance with local area requirements and Department of Transportation Signage Standards (reference 19b).

19-3 **INTERIOR SIGNAGE**.

19-3.1 **General**.

19-3.1.1 Wayfinding systems and interior signage should be designed to help patients and visitors find their way from their entry point in the building to the services and departments they need, directly and without confusion. A sign hierarchy consisting of the following types, shall be considered, depending on the facility size:

a. Main directory
b. Orientation maps
c. Secondary directories
d. Directional signs
e. Department identification signs

f. Room identification signs

g. Maintenance identification tags

h. Information, regulatory and code signs, to include fire evacuation signs

i. Elevators and stairs

j. Distribution Zone Identification

19-3.2 **Flexibility**. The signage system must be flexible and adaptable as room functions change, to preclude the user from being required to purchase new signs every time a room or department changes or relocates within the facility. Changeable inserts may not always be the most user-friendly means to accommodate functional flexibility for signage. Signage systems that provide another means of accommodating changes (flip-up sections, entire cover removable, etc) should be investigated.

19-4 **SIGN MAKING EQUIPMENT**. Requirements for sign making equipment or software shall be determined jointly by the Using Agency and the design team. If sign making equipment is to be provided, the equipment shall be included in the construction contract.

19-5 **EXISTING CONSTRUCTION**. Where projects involve the addition, alteration or upgrade of an existing medical facility, an analysis shall be made of existing site and building traffic patterns to determine whether the existing signage system requires modification. Existing signage systems shall be extended to building additions, where feasible.

REFERENCES

19a. Americans with Disabilities Act Accessibility Guidelines (ADAAG), latest edition.

19b. Fed Std 795, Uniform Federal Accessibility Standards (UFAS), latest edition.

19c. Department of Transportation Signage Standards

APPENDIX A
ARCHITECTURAL AND ENGINEERING DESIGN REQUIREMENT

LEGEND and NOTES

SYNOPSIS

Appendix A is a compilation of detailed architectural and engineering design criteria organized by standard Room Codes. The Room Codes used to organize the Appendix A are the same as the codes used to organize the Program for Design and the Equipment List, so the initial design requirements should be well established for the designer.

TABLE OF CONTENTS

ITEM	PAGES
Synopsis and Table of Contents	A-1
Legend and Notes	A-2 thru A-12
Database	A-13 thru A-57

APPENDIX A
ARCHITECTURAL AND ENGINEERING DESIGN REQUIREMENT

LEGEND and NOTES

1. **Room Code (5 characters)**. Room identifier from DoD space planning criteria. This code is the reference key that ties the Appendix A criteria to the DoD Program for Design.

2. **Room Name (37 characters)**. From the DoD space planning system.

3. **Architectural (27 characters)**.

a. Matrls and Fin. Materials and Finishes (13 characters).

FL Floor and base finishes (2 characters). See Architectural Note 1.

- AR Acrylic resin system with integral coved base. See Architectural Note 12.
- CP Carpet with resilient base, see Architectural Note 2.
- CS Concrete sealer. Resilient base on gypsum wallboard and plaster walls. No base on concrete or block walls.
- CT Ceramic tile with ceramic tile base.
- ER Epoxy resin system with integral coved base. See Architectural Note 12.
- ET Epoxy terrazzo with epoxy terrazzo base.
- PF Prefabricated.
- QT Quarry tile with quarry tile base.
- SP Special. Determined by the Design Agent. See Architectural Note 6.
- SV Sheet vinyl with integral vinyl base. See Architectural Note 3.
- VT Vinyl composition tile with resilient base. See Architectural Note 2.

WAL Wall Material & Finish (3 characters).
First character is wall material. Second and third characters are finish. See Architectural Note 1.

Wall Material (first character)

- C Concrete
- B Concrete block or clay tile
- G Gypsum wallboard. See Architectural Note 4.
- S Special. Determined by the Design Agent. See Architectural Note 6.

APPENDIX A
ARCHITECTURAL AND ENGINEERING DESIGN REQUIREMENT

Wall finish material (second and third characters)

AF	Acoustical wall fabric
CS	Concrete sealer
CT	Ceramic tile
LG	Liquid Glaze Coat. See Architectural Note 5.
PF	Prefabricated
PT	Paint.
EL	Epoxy coating, seamless, lead lined. See Architectural Note 10.
EP	Epoxy coating, seamless. See Architectural Note 10.
SP	Special. Determined by the Design Agent. See Architectural Note 6.

CLG Ceiling Material and Finish (3 characters).
See Architectural Note 1.
First character is ceiling material.
Second and third characters are finish.

Ceiling material (first character).

A	Acoustic ceiling tile
C	Concrete
G	Gypsum wallboard
S	Special. Determined by the Design Agent. See Architectural Note 6.

Ceiling Finish Material (Second and third characters)

CS	Concrete sealer
LG	Liquid Glaze Coat
PF	Prefabricated
PT	Paint
SP	Special. Determined by the Design Agent. See Architectural Note 6.
EP	Epoxy coating, seamless, with coved corners. See Architectural Note 11.
Tl	Standard finish.
T2	Waterproof finish.

APPENDIX A
ARCHITECTURAL AND ENGINEERING DESIGN REQUIREMENT

b. CLG HT. Maximum ceiling height in millimeters (4 characters).

2400mm	= 7'–10.5"	corresponds to 8'-0"
2600mm	= 8'–6.4"	corresponds to 8'-6"
2700mm	= 8'–10.3"	corresponds to 9'-0"
2900mm	= 9'–6.2"	corresponds to 9'-6"
3000mm	= 9'–10.1"	corresponds to 10'-0"

A = If this area is combined with a delivery room, provide 3000mm (10'-0") ceiling height, minimum. If not combined, provide 2400mm (8'-0") CLG HT.
B = 3000mm (10'-0") minimum.
VAR = Varies (designers choice)

c. DOOR SIZE. First line is minimum door width in millimeters (4 characters). Second line is door width in feet and inches.

450mm corresponds to 1'-6"
900mm corresponds to 3'-0"
1050mm corresponds to 3'-6"
1200mm corresponds to 4'-0"

A = Pair 750mm (2'-6") doors.
B = Pair 900mm doors.
C = Pair 1050mm doors.
D = Double door, 1200mm and 450mm
E = Pair 900mm doors or 1200mm doors as directed by using service.
F = 900mm between scrub room and nursery. 1200mm between delivery room and nursery.
G = In clinics, provide 1050mm. In hospitals, provide double door, 1050mm and 450mm.
H = 2400mm (8'-0"), pair 1200mm doors, by 2600mm(8'6") breakaway glass doors or double door 1200mm and 450mm as directed by using service.
I = 3000mm (10'-0") by 3000mm (10'-0") minimum. Number as required by dock.
J = Main OR door, pair 900mm doors. Staff door from clean corridor, 1200mm. Door to sub- sterile, 1050mm.
K = Main OR door, pair 900mm doors or 1200mm and 450mm or 1050mm and 450mm as directed by using service. Staff door from clean corridor, 1200mm. Door to sub-sterile, 1050mm.
L = Darkroom door. Provide revolving door or light tight door, or vestibule entry, as appropriate.
M = Open (no door) or 900mm door as directed by using service.
N = Open (no door) or 1200mm door as directed by using service.
SP = Special, designers choice.
VAR = Varies, designers choice.
VET = Special door in veterinary facility. See Architectural Note 13.
OPEN = No door required.

d. NOISE. ACOUSTIC NOISE LEVEL. (5 characters).

APPENDIX A
ARCHITECTURAL AND ENGINEERING DESIGN REQUIREMENT

IN RM. Noise level in room (2 characters). First line is minimum, second line is maximum. See Architectural Note 8.

SC. Sound transmission Class (2 characters). See Architectural Note 9.

e. ARCHITECTURAL NOTES.

1. When two finishes are appropriate for a room, the preferred finish is shown in Appendix A first. The using Military Department may select the alternate finish.
2. Resilient Base. Rubber or vinyl coved base for use with resilient tile. Coved base shall terminate and butt at the face return of steel door jambs. A straight vinyl or rubber base or carpet base shall be used with carpet flooring. Fire-retardant wood blocking or metal runners shall be provided at the steel stud base channel runner for all gypsum board corridor walls.
3. Sheet Vinyl. Solid, seamless vinyl in either roll or tile format with routed, welded, grooved seams where melted vinyl is used for an impervious, waterproof seal. Chemical sealants are unacceptable. Cushioned sheet vinyl may not be used. Provide seamless sheet vinyl base integral with the flooring, using the same joint sealing application technique of grooved, melted, welded, vinyl for an impervious waterproof seal.
4. Gypsum wallboard. Minimum 5/8 inch ("green board" for damp or wet areas) .
5. Liquid Glaze Coat. This coating is a seamless, sprayed-on, lusterless semi-gloss two-component polyester epoxy or polyurethane finish. In humid climates avoid the use of LGC on interior surface of exterior wall.
6. Special or alternate materials and surfaces finishes approved by the Design Agent.
7. Not used.
8. The acoustical noise level in the room is the design value for the NC-Level for the background (ambient) noise level.
9. The STC specifies the performance of the room enclosure in isolating against airborne sound. Where no door is specified, the remainder of wall partition/ceiling system should still be designed to this value. This design value is generally considered as a minimum rating.
10. Seamless epoxy coating shall be used on all walls throughout the veterinary facility. Concrete block substrate shall be vermin-proof construction with flush joints.
11. Seamless epoxy coating shall be used on ceilings in the veterinary facility. Gypsum wallboard substrate shall consist of two layers of fiber reinforced wallboard. Ceiling shall have coved corners.
12. Provide non-slip finishes in corridors and all areas where pedestrian traffic is anticipated. Provide smooth finish where greater degree of cleanability is required (under cage racks for example).
13. Provide vermin proof hollow metal doors, 48 inch by 96 inch, with 12 inch by 12 inch red glass vision panel and recessed hardware. Provide door seals. Do not provide door lock.

APPENDIX A
ARCHITECTURAL AND ENGINEERING DESIGN REQUIREMENT

4. **STRU FLR LOAD. Floor load in kilo-Pascal (4 characters)**.

kPa corresponds to	pounds/SF (PSF)
3	60
4	80
5	100
6	125
7.5	150
10	200
12	250
13	275
17	350

A = Design for actual wheel loads or 7.5 kPA (150psf) minimum.

B = Design for actual equipment loads or 7.5kPa (150 psf) minimum.

C = Design for actual equipment loads or 5 kPA (100 psf) minimum.

D = Design for actual weight of shelves plus 55 kg/filing meter (3.1 lbs/filling in.) or 7.2 kPa (150 psf) minimum on the floor.

APPENDIX A
ARCHITECTURAL AND ENGINEERING DESIGN REQUIREMENT

5. **ELECTRICAL (20 characters)**.

a. LIGHT.

LEV Maximum general lighting level in lux (4 characters). First line is general lighting level, second line is task lighting.

LUX	corresponds to Footcandles
100	10
150	15
200	20
300	30
500	50
700	70
1100	100
1600	150
2100	200

N Lighting Notes (1 character). Second line is second note.

A. Provide full-range dimming in room or special task area.
B. Provide recessed ceiling exam fixture with high color rendering type (86 minimum CRI, CCT of 5000 degree K, and simulate outdoor daylight) lamps and 1100 lux task illumination on bed or recovery area (see section 9)
C. Provide high color rendering index type (86 minimum CRI, a CCT of 5000 degree K, and simulate outdoor daylight)lamps.
D. Provide O.R. Type Light Fixture or exam Light with dimmer at task location. The general illumination fixtures shall have high color rendering index type (90 minimum CRI, a CCT of 5000 degree K, and simulate outdoor daylight) lamps. Those fixtures that have battery backup shall have full illumination when energized by battery or UPS.
E. Explosion Proof design typically required.
F. Provide multi-level switching with conventional on/off switching. Provide lighting control at individual task location where practical.
G. Provide Safelight for film processing as required by Equipment List.
H. Provide full-range dimming at task location.
I. Provide recessed ceiling mounted task illumination with full-range dimming.

b. ES. PWR. Essential power required in room (9 characters).

PWR Approximate percentage of general power outlets on essential system or note as listed below (3 characters).

R Selected receptacles.
R1 One receptacle per bed.
RA All receptacles.
RC Dedicated receptacles for critical care (refer to NFPA-70, Article 517).

LT Approximate percentage of general lighting on essential system or note as listed below (3 characters).

APPENDIX A
ARCHITECTURAL AND ENGINEERING DESIGN REQUIREMENT

L Task Lighting.
LB Task Lighting, General Illumination, and battery powered lighting. (refer to section 9).
LS Task Lighting and Selected General Illumination Identified and coordinated with the using Military Department.

N Essential Power notes (1 character).

E. Selected equipment connections.
U. Provide essential power only as required by using Military Department.
S. Special (Non standard areas).

APPENDIX A
ARCHITECTURAL AND ENGINEERING DESIGN REQUIREMENT

6. **Medical Gases (23 characters)**. The number of outlets required for each gas type is listed in the appropriate column. "0" is entered in columns where no outlet is required to make the table easier to read.

MCA - Medical Compressed Air
DCA - Dental Compressed Air
LA - Laboratory Air
PA - Process Air
MV - Medical Vacuum
DHV - Dental High Vacuum
DLV - Dental Low vacuum
LDE - Laboratory Dust Evacuation
OX - Oxygen
NO - Nitrous Oxide
NI - Nitrogen
WAGD– Waste Anesthetic Gas Disposal
N - See Medical Gas Notes (1 character).

MEDICAL GAS NOTES.

A. Each patient is provided with the number of outlet(s) listed.
Each patient is provided a medical vacuum inlet(s), see individual listing.
Each patient is provided access to a medical air outlet. Where two patients share a common wall, they may share a single outlet, excluding psychiatric patients. Do not provide in pediatric play area.
B. The medical gases specified will be per patient station, workstation, etc.
C. The number of each gas indicated is the maximum allowable for the particular room. See the DoD and/or Service specific guide plate for location of medical gas columns and wall outlets. Coordinate with Using Military Activity for number and location of outlets.
D. All anesthetizing locations will have a waste anesthetic gas disposal system. Use of medical vacuum system is not recommended for evacuation in DoD facilities. DLV may be used in dental treatment rooms for anesthesia scavenging where a central system is installed.
E. One each OX and MV is required at the headwall unit and the infant resuscitation area of the birthing room.
F. Not used.
G. The medical gases specified will be per bassinet or infant station.
H. The medical gases specified will be per 4 bassinets or infant stations. Where the LDR birthing room concept is used, a minimum of one grouping will be provided in each LDR.
I. For equipment testing and calibration, equipment shall be tested with the specific gas used in normal operation.
J. Provide valved regulator station for PA.
K. Each utility center requires 1 DCA and 1 DLV.
L. A natural gas outlet (counter mounted) and a lab air outlet (under counter-mounted) will be provided at each dental work station as shown in Appendix A.
M. All contingency beds require 1 OX, 1 MV, 1 MCA per bed station. In bed expansion situations in "peace time" facilities also provide 1 OX, 1 MV, 1 MCA per contingency bed expansion requirements noted in the program for design.
N. Facilities may use nitrogen for driving surgical handpiece in oral surgery DTRs.

7. **HVAC (23 characters)**.

a. BL. Air Balance (2 characters)

APPENDIX A
ARCHITECTURAL AND ENGINEERING DESIGN REQUIREMENT

++ Room exhaust and/or return is 20% less than supply.
+ Room exhaust and/or return is 10% less than supply.
0 Room exhaust and/or return is equal to supply.
- Room exhaust and/or return is 10% more than supply.
-- Room exhaust and/or return is 20% more than supply.
EX Room totally exhausted without supply.

b. AC. Air Change (2 characters) is the minimum total air changes per hour required to meet ventilation requirements at design conditions. These rates are considered the minimum required for normal health and comfort consideration. Additional air may be required for temperature, dilution, and odor control, as well as air requirements for such items as hoods, glove boxes, clean-air stations, combustion equipment and dust collectors.

c. OA. Outside Air (2 characters) is the minimum outside air changes per hour required to meet ventilation requirements at design conditions.

* Asterisk indicates that ventilation is to be based on the greater of 4 outdoor air changes or 15 CFM outdoor air per person.

d. TEMP. Interior design temperature. First line is in degrees Celsius (C), second line is in degrees Fahrenheit (F), for heat gains calculations. When the only temperature listed is for the summer condition, this temperature will be used for year around operation. When cooling is required during winter, such as in interior zones, temperature listed under summer conditions should be used.

SM. Minimum design temperature (2 characters) for summer months.

* Indicates Summer Design Temperature shall be 15^0F less than 2.5% Outside Design Temperature but will not be less than 75^0F or greater than 78^0F unless otherwise noted.

R Indicates design shall accommodate a variable (to user) temperature range of 20–24^0C (68-75^0F)

SP Special Determined by the Design Agent.

WN. Maximum design temperature (2 characters) for

the space during heating season.

- Indicates no temperature control required.

e. RH. Relative Humidity (1 characters). This is the relative humidity to be maintained in a space as part of the designed conditions.

Blank RH may vary from 30-60%.
Y RH must be controlled at 55%, + or - 5%.

f. FL. Filtration (5 characters) indicates the level and location of filtration required. See HVAC Note B.

IN Intermediate filtration in percent (2 characters).
FN Final filtration in percent (2 characters).

g. EX. Exhaust Outside (1 character). This column lists areas that require 100% exhaust directly to the outside.

Y Exhaust to outside required.
Blank Exhaust not required.

h. N. See HVAC Notes (3 characters)

<u>HVAC Notes</u>.

A. Nursery Isolation Room relative pressurization requirements may vary among individual facilities, depending upon functional requirements. Designers shall coordinate with the Using Service for each facility to determine whether disease isolation (negative pressurization) or protective isolation (positive pressurization) is required. While “switchability” (room convertible from disease isolation to protective isolation, or vice versa) is discouraged, facility function and program limitations may dictate that this feature be provided.

B. General Filtration. Filter efficiencies noted here are in accordance with the *Minimum Efficiency Reporting Value (MERV)* ratings of ASHRAE Standard 52.2. Filters with a MERV rating of 8 shall be provided for all outdoor air. These filters shall be located upstream of air-conditioning equipment. Intermediate Filters indicated in column “IN” shall be located downstream of the supply fan. Final filters indicated in column “FN” shall be located at air outlets or in close proximity to outlets (coordinate with using Military Activity). All filters should be installed to prevent leakage between the filter segments and between the filter and its supporting frame.

C. During period of non-use, the air volume may be reduced to 6 air changes per hour, while maintaining the required air balance. Intermediate filtration with a value of MERV 13 is indicated because the same AHU normally serves adjacent OR/DR support areas requiring this level of filtration. Where the AHU serves only OR/DR spaces, the ~~90%~~ MERV 13 intermediate filter may be replaced with a MERV 11 filter, intended to prolong the life of the final filter.

D. When the Using Service intends the routine usage of nitrous oxide in the DTR, routine being defined as exceeding 5 hours per week, the following criteria shall apply:
- DTR room air changes shall be not less than 12 total AC/H.
- The room shall be totally exhausted.
- Provide a minimum of one low-level exhaust register, sized to remove a minimum of 20% of the total room exhaust volume.

APPENDIX A
ARCHITECTURAL AND ENGINEERING DESIGN REQUIREMENT

- During period of non-use, air change rate may be reduced to 3 total AC/H.

E. General, Isolation Rooms. For Disease Isolation Bedrooms, bedroom to be negative to anteroom, anteroom to be negative to corridor. For Protective Isolation Bedrooms, bedroom to be positive to anteroom, anteroom to be positive to corridor.

F. For patient bedrooms in northern climates where the winter design outside design temperature is less than -8^{0}C (18^{0}F), increase the total air changes (AC) to 6 or provide a perimeter heating system.

G. Design in accordance with NFPA 99.

H. May require vehicle exhaust, CO detection.

I. When the Using Service intends the routine usage of nitrous oxide in the DTR, routine being defined as exceeding 5 hours per week, the following criteria shall apply:
- DTR room air changes shall be not less than 12 total AC/H.
- The room shall be totally exhausted.
- Provide a minimum of one low-level exhaust register, sized to remove a minimum of 20% of the total room exhaust volume.
- During period of non-use, air change rate may be reduced to 5 total AC/H. Positive pressurization shall be maintained.

J. For projects incorporating brace/appliance fitting or shop applications, evaluate room and equipment exhaust requirements for removal of toxic or flammable fumes and dust.

K. Consult manufacturer recommendations for temperature requirements for electrical/electronic equipment. In humid climates fan rooms shall not be ventilated with unconditioned outside air.

L. Up to 50% of supply air may be air that is transferred from administrative areas of the building.

M. Provide exhaust or fume hoods, and localized exhaust as required.

N. Verify computer heat load requirement.

O. Provide adjustable (to user) humidistat within the room.

P. Provide adjustable (to user) thermostat and humidistat within the room.

Q. HEPA Filtration of room exhaust is not required if designed to discharge away from public areas (sidewalks, eg.) and such as to avoid reentrainment into any building opening or outside air intake. Exhaust of TB isolation room, toilet, and anteroom to be by dedicated exhaust system, ie., exhaust system serving only TB isolation room(s). Isolation room pressure to remain constant - not switchable from Disease Isolation mode to Protective Isolation mode, or vice versa.

R. Consult Design Agent to determine if a clean room is required in accordance with USP 797.

S. Pediatric and emergency waiting rooms use requirements for WRC02.

APPENDIX A

ARCHITECTURAL AND ENGINEERING DESIGN REQUIREMENTS

Room Code	Room Name	ARCHITECTURAL MATRL+FIN FL	WL	CLG	CLG HT	DOOR SIZE	NOISE RM	SC	STRUCTURAL FLR LOAD	ELECTRICAL LIGHT LEV	N	ES PWR PWR	LT	N	MEDICAL GASES MCA	DCA	LAA	PAA	MV	DHV	DLV	LDE	OX	NO	NI	WAGD	N	HVAC BL	AC	OA	TEMP SM	WN	RH	FL IN	F	EX	N
AMB01	AMBULANCE SHELTER	CS	SSP	SSP	VAR	SP	.	.	A	50	.	.	LS	.	.	.	.	.	.	.	.	.	.	.	.	.	.	.	.	.	.	.	.	.	.	.	.
		.	.	.	VAR	SP	.		A	.	.			.												.					.	.					.
AMB02	AMBULANCE GARAGE	CS	BPT	SSP	VAR	SP	35	50	A	50	.	.	LS	.	.	.	.	.	.	.	.	.	.	.	.	.	.	0	6	4	.	20	.	.	.	Y	H
		.	.	.	VAR	SP	40		A	.	.			.												.					.	68					.
ANCW1	ANESTHESIA CLEAN WORKROOM	SV	GLG	AT2	2400	900	35	40	3	700	.	R	L	.	1	.	.	.	1	.	.	.	1	1	.	1	D	-	4	1.5	24	.	.	14	.	Y	.
		ET	.	.	8-0	3-0	40		60	.	.			.												.					75	.					.
ANSW1	ANESTHESIA SOILED WORKROOM	SV	GLG	AT2	2400	900	35	40	3	300	.	R	L	.	1	.	.	.	1	.	.	.	1	1	.	1	D	-	6	2	24	.	.	14	.	Y	.
		ET	.	.	8-0	3-0	40		60	.	.			.												.					75	.					.
APAM1	APPLIANCE ADJUST/MODIFY FULL	VT	GPT	AT1	2400	1200	35	40	C	500	C	R	.	.	.	.	1	1	.	.	.	1	.	.	.	.	J	0	6	1.5	*	21	.	.	.	.	J
		.	.	.	8'-0"	4-0	40		.	.	.			.												.					*	70					M
APFB1	APPLIANCE FULL BRACE SHOP	VT	GAF	AT1	2400	1200	70	40	5	500	C	.	.	.	.	.	1	1	.	.	.	1	.	.	.	.	J	0	6	1.5	*	21	.	.	.	.	J
		.	.	.	8'-0"	4-0	80		100	.	.			.												.					*	70					M
APFR1	APPLIANCE FITTING ROOM	VT	GPT	AT1	2400	900	35	40	3	500	C	.	.	.	.	.	1	1	.	.	.	1	.	.	.	.	J	0	6	1.5	*	21	.	.	.	.	J
		.	.	.	8-0	3-0	40		60	.	.			.												.					*	70					M
APLA1	APPLIANCE LAMINATION/MOLDING	VT	GPT	AT1	2400	900	35	40	C	500	C	.	.	.	.	.	.	1	.	.	.	.	.	.	.	.	J	-	6	1.5	*	21	.	.	.	Y	J
		.	.	.	8-0	3-0	40		.	.	.			.												.					*	70					M
APMS1	APPLIANCE MACHINE SHOP	VT	GPT	AT1	2600	1200	35	40	D	500	C	.	.	.	.	.	.	1	.	.	.	1	.	.	.	.	J	-	6	1.5	*	21	.	.	.	Y	J
		.	.	.	8-6	4-0	40		.	.	.			.												.					*	70					M
APSH1	APPLIANCE SEWING/SHOE SHOP	VT	GPT	AT1	2600	1200	35	40	C	500	C	.	.	.	.	.	.	1	.	.	.	1	.	.	.	.	J	-	6	1.5	*	21	.	.	.	Y	J
		.	.	.	8-6	4-0	40		.	.	.			.												.					*	70					M
APWA1	APPLIANCE WELDING AREA	CS	GPT	AT1	2600	1200	35	40	D	500	C	.	.	.	.	.	.	1	.	.	.	.	.	.	.	.	.	-	6	1.5	*	21	.	.	.	Y	J
		VT	.	.	8-6	4-0	40		.	.	.			.												.					*	70					M
AUD01	AUDITORIUM	CP	SSP	SSP	VAR	B	25	50	5	300	F	.	.	.	.	.	.	.	.	.	.	.	.	.	.	.	.	0	12	*	*	20	.	.	.	.	.
		VT	.	.	VAR	3-0	30		100	.	.			.												.					*	68					.
AVB01	PROJECTION BOOTH	SP	SPF	SPF	VAR	3-0	25	50	3	300	.	.	.	.	.	.	.	.	.	.	.	.	.	.	.	.	.	0	4	1	*	20	.	.	.	.	.
		.	.	.	VAR	SP	30		60	.	.			.												.					*	68					.

Room Code	Room Name	ARCHITECTURAL MATRL+FIN FL	WL	CLG	CLG HT	DOOR SIZE	NOISE RM	SC	STRUCTURAL FLR LOAD	ELECTRICAL LIGHT LEV	N	ES PWR PWR	LT	N	MEDICAL GASES MCA	DCA	LA	PA	MV	DHV	DLV	LDE	OX	NO	NI	WAGD	N	HVAC BL	AC	OA	TEMP SM	WN	RH	FL IN	F	EX	N
AVPD1	AUDIOVISUAL PROGRAM DISTRIBUTION	VT	GPT	AT1	2400	900	25	40	3	300	.	.	.	.	.	.	.	.	.	.	.	.	.	.	.	.	.	0	4	1	*	20	.	.	.	.	.
		.	GAF	.	8-0	3-0	30		60	.	.			.													.				*	68					.
BF000	BANKING FACILITY - EQ BY OTHERS	VT	GPT	AT1	2600	A	35	40	3	500	.	.	.	.	.	.	.	.	.	.	.	.	.	.	.	.	.	0	4	1	*	20	.	.	.	.	.
		SP	GAF	.	8-6	A	40		60	1100	.			.													.				*	68					.
BF001*	ATM ALCOVE - EQUIPPED BY OTHERS	SP	SSP	SSP	VAR	VAR	VAR	VAR	3	300	.	R	.	.	.	.	.	.	.	.	.	.	.	.	.	.	.	.	.	.	SP	.	.	.	.	.	.
		CP	.	AT1	VAR	VAR	VAR		60	.	.			.													.				SP	.					.
BLND1	BLIND VENDORS AREA	SP	SSP	SSP	VAR	900	35	40	3	500	.	.	.	.	.	.	.	.	.	.	.	.	.	.	.	.	.	.	4	1	*	20	.	.	.	.	.
		VT	GPT	AT1	VAR	3-0	40		60	.	.			.													.				*	68					.
BMCW1	BIOMEDICAL, COMMON WORK AREA	VT	GPT	AT1	2600	1200	35	40	C	500	.	.	.	.	1	1	1	1	1	.	.	.	1	1	1	1	D	0	4	1	*	20	.	.	.	Y	.
		.	GLG	.	8-6	4-0	40		.	.	.			.													.				*	68					.
BMER1	BIOMEDICAL, ELECTRONIC REPAIR	VT	GPT	AT1	2600	1200	35	40	C	1100	.	.	.	.	.	.	.	.	.	.	.	.	.	.	.	.	.	-	4	1	*	20	.	.	.	Y	.
		.	GLG	.	8-6	4-0	40		.	.	.			.													.				*	68					.
BMRA1	BIOMEDICAL, RECEIVING AREA	VT	GPT	AT1	2600	1200	35	40	3	300	.	.	.	.	.	.	.	.	.	.	.	.	.	.	.	.	.	0	4	1	*	20	.	.	.	.	.
		.	GLG	.	8-6	4-0	40		60	.	.			.													.				*	68					.
BMWS1	BIOMEDICAL, WORKSTATION	VT	GPT	AT1	2600	1200	35	40	3	500	.	.	.	.	1	1	1	1	1	.	.	.	1	1	1	1	D	0	4	1	*	20	.	.	.	.	.
		.	GLG	.	8-6	4-0	40		60	.	.			.													D				*	68					.
BRAR1	BEDROOM, ANTEROOM, ISOLATION, NEGATIVE	VT	GPT	GPT	2600	1200	30	40	3	300	.	.	L	.	.	.	.	.	.	.	.	.	.	.	.	.	.	-	10	2	24	24	.	14	.	Y	E
		SV	GLG	GLG	8-6	4-0	40		60	.	.			.													.				75	75					.
BRAR2*	BEDROOM, ANTEROOM, ISOLATION, POSITIVE	VT	GPT	GPT	2400	1200	30	40	3	300	.	.	L	.	.	.	.	.	.	.	.	.	.	.	.	.	.	+	10	2	24	24	.	14	.	.	E
		SV	GLG	GLG	8'-0"	4'-0"	40		60	.	.			.													.				75	75					.
BRIC1	BEDROOM, INTENSIV/CORONARY, 1 BED	VT	GPT	AT1	2600	H	25	40	3	300	B	RC	L	.	1	.	.	.	3	.	.	.	3	.	.	.	.	+	6	2	24	24	Y	14	.	.	P
		SV	GLG	AT2	8-6	4-0	30		60	1100	.			.													.				75	75					.
BRII1	BEDROOM, ISOLATION, ICU/CCU, NEGATIVE	VT	GPT	GPT	2600	H	25	40	3	300	B	RC	L	.	1	.	.	.	3	.	.	.	3	.	.	.	.	–	12	2	24	24	Y	14	.	Y	PQ
		SV	GLG	GLG	8-6	.	30		60	1100	.			.													.				74	74					E
BRII2*	BEDROOM, ISOLATION, ICU/CCU, POSITIVE	VT	GPT	GPT	2600	H	25	40	3	300	B	RC	L	.	1	.	.	.	3	.	.	.	3	.	.	.	.	++	12	2	24	24	Y	14	17	.	PQ
		SV	GLG	GLG	8'-6"	.	35		60	1100	.			.													.				75	75					E

APPENDIX A

ARCHITECTURAL AND ENGINEERING DESIGN REQUIREMENTS

Room Code	Room Name	ARCHITECTURAL MATRL+FIN FL	WL	CLG	CLG HT	DOOR SIZE	NOISE RM	SC	STRUCTURAL FLR LOAD	ELECTRICAL LIGHT LEV	N	ES PWR PWR	LT	N	MEDICAL GASES MCA	DCA	LA	PA	MV	DHV	DLV	DLE	OX	NO	NI	WAGD	N	HVAC BL	AC	OA	TEMP SM	WN	RH	FL IN	F	EX	N
BRIP1	BEDROOM, ISOLATION, PEDIATRIC, NEGATIVE	VT	GPT	GPT	2600	1200	35	40	3	300	B	RC	L	.	1	.	.	.	2	.	.	.	1	.	.	.	A	--	12	2	24	24	.	14	.	Y	E
		SV	GLG	GLG	8-6	4-0	40		60	1100	.			.													.				75	75					Q
BRIP2*	BEDROOM, ISOLATION, PEDIATRIC, POSITIVE	VT	GPT	GPT	2600	1200	35	45	3	300	B	RC	L	.	1	.	.	.	2	.	.	.	1	.	.	.	A	++	12	2	24	24	.	14	17	.	E
		SV	GLG	GLG	8-6	4'-0"	40		60	1100	.			.													.				75	75					Q
BRIT1	BEDROOM, ISOLATION, NEGATIVE	SV	GPT	GPT	2600	1200	30	40	3	300	B	RC	L	.	1	.	.	.	2	.	.	.	1	.	.	.	.	--	12	2	24	24	.	14	.	Y	E
		VT	GLG	GLG	8-6	4-0	35		60	1100	.			.													.				75	75					Q
BRIT2	BEDROOM, ISOLATION, POSITIVE	SV	GPT	GPT	2400	1200	30	40	3	300	B	RC	L	.	1	.	.	.	2	.	.	.	1	.	.	.	.	++	12	2	24	24	.	14	17	.	E
		VT	GLG	GLG	8-0	4-0	35		60	1100	.			.													.				75	75					.
BRLC1	BEDROOM, LIGHT CARE, 1 BED	VT	GPT	AT1	2600	1200	30	40	3	100	C	.	LS	U	1	.	.	.	1	.	.	.	1	.	.	.	A	0	4	2	24	24	.	14	.	.	F
		.	.	.	8-6	4-0	35		60	300	.			.													.				75	75					.
BRLC2	BEDROOM, LIGHT CARE, 2 BEDS	VT	GPT	AT1	2600	1200	30	40	3	100	C	R	LS	U	1	.	.	.	2	.	.	.	2	.	.	.	A	0	4	2	24	24	.	14	.	.	F
		.	.	.	8-6	4-0	35		60	300	.			.													M				75	75					.
BRMB1*	BEDROOM, MOBILIZATION, 1 BED	VT	GPT	AT1	2400	1200	30	40	3	100	C	R	L	.	1	.	.	.	1	.	.	.	1	.	.	.	M	0	4	2	24	24	.	14	.	.	F
		.	.	.	8'-0"	4'-0"	35		60	300	.			.													.				75	75					.
BRMB2*	BEDROOM, MOBILIZATION, 2 BED	VT	GPT	AT1	2400	1200	30	40	3	100	C	R	L	.	1	.	.	.	1	.	.	.	1	.	.	.	M	0	4	2	24	24	.	14	.	.	F
		.	.	.	8'-0"	4'-0"	35		60	300	.			.													.				75	75					.
BRMS1	BEDROOM, MEDICAL/SURGICAL, 1 BED	VT	GPT	AT1	2600	1200	30	40	3	100	C	R1	LS	.	1	.	.	.	2	.	.	.	2	.	.	.	A	0	4	2	24	24	.	14	.	.	F
		.	.	.	8-6	4-0	35		60	300	.			.													M				75	75					.
BRMS2	BEDROOM, MEDICAL/SURGICAL, 2 BEDS	VT	GPT	AT1	2600	1200	30	40	3	100	C	R1	LS	.	1	.	.	.	2	.	.	.	2	.	.	.	A	0	4	2	24	24	.	14	.	.	F
		.	.	.	8-6	4-0	35		60	300	.			.													M				75	75					.
BRNP1	BEDROOM, NEURO/PSYCH, 1 BED	VT	GPT	GPT	2600	1200	35	40	3	100	C	.	LS	.	.	.	.	.	.	.	.	.	.	.	.	.	.	0	4	2	24	24	.	14	.	.	F
		.	.	.	8-6	4-0	40		60	300	.			.													.				75	75					.
BRNP2	BEDROOM, NEURO/PSYCH, 2 BEDS	VT	GPT	GPT	2600	1200	35	40	3	100	C	.	LS	.	.	.	.	.	.	.	.	.	.	.	.	.	.	0	4	2	24	24	.	14	.	.	F
		.	.	.	8-6	4-0	40		60	300	.			.													M				75	75					.
BRNP5	BEDROOM, NEURO/PSYCH, SECLUSION	VT	GPT	GPT	2600	1200	35	40	3	100	C	.	LS	.	.	.	.	.	.	.	.	.	.	.	.	.	.	0	6	2	24	24	.	14	.	.	F
		.	.	.	8-6	4-0	40		60	300	.			.													.				75	75					.

Room Code	Room Name	ARCHITECTURAL MATRL+FIN FL	WL	CLG	CLG HT	DOOR SIZE	NOISE RM	SC	STRUCTURAL FLR LOAD	ELECTRICAL LIGHT LEV	N	ES PWR PWR	LT	N	MEDICAL GASES MCA	DCA	LA	PA	MV	DHV	DLV	LDE	OX	NO	NI	WAGD	N	HVAC BL	AC	OA	TEMP SM	WN	RH	FL IN	F	EX	N
BRNP6	BEDROOM, N/P, SECLUSION ANTEROOM	VT	GPT	AT1	2600	1200	30	40	3	300	.	.	.	.	.	.	.	.	.	.	.	.	.	.	.	.	.	0	4	2	24	24	.	14	.	.	.
		.	.	.	8-6	4-0	35		60	.	.			.													.				75	75					.
BRPB1	BEDROOM, PEDIATRICS, 1 BED	VT	GPT	AT1	2600	1200	35	40	3	100	C	R1	LS	.	1	.	.	.	1	.	.	.	1	.	.	.	A	0	4	2	24	24	.	14	.	.	F
		.	.	.	8-6	4-0	40		60	300	.			.													.				75	75					.
BRPB2	BEDROOM, PEDIATRICS, 2 BEDS	VT	GPT	AT1	2600	1200	35	40	3	100	C	R1	LS	.	1	.	.	.	2	.	.	.	2	.	.	.	A	0	4	2	24	24	.	14	.	.	F
		.	.	.	8-6	4-0	40		60	300	.			.													.				75	75					.
BRUN1*	SINGLE PATIENT ROOM ACUITY ADAPTABLE.	VT	GPT	AT1	2600	1200	30	40	3	300	B	RC	L	.	1	.	.	.	3	.	.	.	3	.	.	.	A	+	6	2	24	24	Y	14	.	.	P
		SV	.	.	8'-6"	4'-0"	35		60	1100	.			.													.				75	75					.
BX000	EXCHANGE AREA - EQUIP BY OTHERS	VT	GPT	AT1	2600	1200	35	40	3	500	.	.	.	.	.	.	.	.	.	.	.	.	.	.	.	.	.	0	4	1	24	24	.	.	.	.	.
		.	.	.	8-6	4-0	40		60	.	.			.													.				75	75					.
BX001	EXCHANGE VENDING AREA - UTILITY RQD	VT	GPT	AT1	2600	1200	35	50	C	150	.	.	.	.	.	.	.	.	.	.	.	.	.	.	.	.	.	.	.	.	.	.	.	.	.	.	.
		.	.	.	8-6	4-0	40		.	.	.			.													.				.	.					.
CASH1	CASHIER	VT	GPT	AT1	2400	OPEN	35	50	3	500	.	.	.	.	.	.	.	.	.	.	.	.	.	.	.	.	.	0	4	1	*	21	.	.	.	.	.
		CP	.	.	8'-0"	OPEN	40		60	.	.			.													.				*	70					.
CHC01	CART HOLDING, CLEAN	VT	GPT	AT1	2400	900	35	40	5	50	.	.	.	.	.	.	.	.	.	.	.	.	.	.	.	.	.	+	4	1	*	21	.	14	.	.	.
		.	.	.	8-0	3-0	40		100	.	.			.													.				*	70					.
CHS01	CART HOLDING, SOILED	VT	GLG	AT1	2400	900	35	40	5	50	.	.	.	.	.	.	.	.	.	.	.	.	.	.	.	.	.	-	10	1	*	21	.	.	.	Y	.
		.	.	.	8-0	3-0	40		100	.	.			.													.				*	70					.
CLR01	CLASSROOM, TABLE/CHAIR	CP	GPT	AT1	2600	900	25	45	3	700	F	.	.	.	.	.	.	.	.	.	.	.	.	.	.	.	.	0	6	*	*	21	.	.	.	.	.
		VT	GAF	.	8-6	3-0	30		60	.	.			.													.				*	70					.
CLR02	CLASSROOM, WRITING ARM CHAIRS	CP	GPT	AT1	2600	900	25	45	3	700	F	.	.	.	.	.	.	.	.	.	.	.	.	.	.	.	.	0	6	*	*	21	.	.	.	.	.
		VT	GAF	.	8-6	3-0	30		60	.	.			.													.				*	70					.
CLR03	CLASSROOM, COMPUTER	CP	GPT	AT1	2600	900	25	45	3	700	F	.	.	.	.	.	.	.	.	.	.	.	.	.	.	.	.	0	6	*	*	21	.	.	.	.	N
		VT	GAF	.	8-6	3-0	30		60	.	.			.													.				*	70					.
CLR04	CLASSROOM, 2 BED ROOM MOCK-UP	VT	GPT	AT1	2600	1200	25	45	3	100	.	.	.	.	.	.	.	.	.	.	.	.	.	.	.	.	.	0	6	*	*	21	.	.	.	.	.
		.	.	.	8-6	4-0	30		60	300	.			.													.				*	70					.

APPENDIX A

ARCHITECTURAL AND ENGINEERING DESIGN REQUIREMENTS

Room Code	Room Name	ARCHITECTURAL MATRL+FIN FL	WL	CLG	CLG HT	DOOR SIZE	NOISE RM	SC	STRUCTURAL FLR LOAD	ELECTRICAL LIGHT LEV	N	ES PWR PWR	LT	N	MEDICAL GASES MCA	DCA	LA	PA	MV	DHV	DLV	LDE	OX	NO	NI	WAGD	N	HVAC BL	AC	OA	TEMP SM	WN	RH	FL IN	F	EX	N
CLSC1	PATIENT EDUCATION, KIOSK/ALCOVE	CP	GPT	AT1	2600	900	25	45	3	700	F	.	.	.	.	.	.	.	.	.	.	.	.	.	.	.	.	0	6	*	*	21	.	.	.	.	.
		VT	.	.	8-6	3-0	30		60	.	.			.													.				*	70					.
CLSC2*	PATIENT EDUCATION CUBICLE	CP	GPT	AT1	2400	900	35	50	3	700	F	.	.	.	.	.	.	.	.	.	.	.	.	.	.	.	.	.	.	.	*	.	.	.	.	.	.
		VT	.	.	8'-0"	3'-0"	40		60	.	.			.													.				*	.					.
CMP01*	COMPUTER ROOM	VT	GPT	AT1	2400	900	35	50	C	500	.	R	.	U	.	.	.	.	.	.	.	.	.	.	.	.	.	+	4	1	20	20	.	.	.	.	N
		CP	.	.	8'-0"	3'-0"	40		.	.	.			.													.				68	68					.
CMP02*	COMPUTER TERMINAL/SERVER	VT	GPT	AT1	2400	900	35	50	C	500	.	.	.	U	.	.	.	.	.	.	.	.	.	.	.	.	.	+	4	1	20	20	.	.	.	.	N
		.	.	.	8'-0"	3'-0"	40		.	700	.			.													.				68	68					.
CMP03*	COMPUTER ARCHIVE STORAGE	VT	GPT	AT1	2400	900	35	50	D	500	.	.	.	U	.	.	.	.	.	.	.	.	.	.	.	.	.	+	4	1	20	20	.	.	.	.	N
		.	.	.	8'-0"	3'-0"	40		.	.	.			.													.				68	68					.
COM02	COMMUNICATIONS AMBULANCE DISPATCH	VT	GPT	AT1	2400	900	35	40	3	200	.	.	L	E	.	.	.	.	.	.	.	.	.	.	.	.	.	0	4	1	*	21	.	.	.	.	.
		.	.	.	8-0	3-0	40		60	.	.			.													.				*	70					.
COM03	COMM ROOM, CENTRAL ALARM SECURITY	VT	GPT	AT1	2400	900	25	40	3	200	.	R	L	.	.	.	.	.	.	.	.	.	.	.	.	.	.	0	4	1	*	21	.	.	.	.	.
		.	.	.	8-0	3-0	30		60	.	.			.													.				*	70					.
COMC1*	COMMUNICATIONS ROOM	VT	GPT	.	2400	900	25	40	3	500	.	R	LS	.	.	.	.	.	.	.	.	.	.	.	.	.	.	+	1	.	*	20	.	.	.	.	N
		.	.	.	VAR	3'-0"	30		60	.	.			.													.				*	68					.
CRA01	CONFERENCE ROOM, SMALL	CP	GPT	AT1	2600	900	25	40	3	300	.	.	.	.	.	.	.	.	.	.	.	.	.	.	.	.	.	0	6	*	*	21	.	.	.	.	.
		.	SSP	.	8-6	3-0	30		60	.	.			.													.				*	70					.
CRA02*	CONFERENCE ROOM, MEDIUM	CP	GPT	AT1	2600	900	25	40	3	300	.	.	.	.	.	.	.	.	.	.	.	.	.	.	.	.	.	0	6	*	*	21	.	.	.	.	.
		.	SSP	.	8'-6"	3'-0"	30		60	.	.			.													.				*	70					.
CRA03*	CONFERENCE ROOM, LARGE	CP	GPT	AT1	2600	900	25	40	3	300	F	.	.	.	.	.	.	.	.	.	.	.	.	.	.	.	.	0	6	*	*	21	.	.	.	.	.
		.	SSP	.	8'-6"	3'-0"	30		60	700	.			.													.				*	70					.
CRC01	CONFERENCE ROOM, COMMANDERS	CP	GPT	AT1	2600	900	25	40	3	300	.	.	.	.	.	.	.	.	.	.	.	.	.	.	.	.	.	0	6	*	*	21	.	.	.	.	.
		.	SSP	.	8-6	3-0	30		60	.	.			.													.				*	70					.
CROP1*	CONFERENCE ROOM, EMERGENCY OPERATIONS CENTER	CT	GPT	AT1	2600	900	25	40	3	300	F	.	L	U	.	.	.	.	.	.	.	.	.	.	.	.	.	0	6	*	*	21	.	.	.	.	.
		.	SSP	.	8'-6"	3'-0"	30		60	700	.			.													.				*	70					.

Room Code	Room Name	ARCHITECTURAL MATRL+FIN FL	WL	CLG	CLG HT	DOOR SIZE	NOISE RM	SC	STRUCTURAL FLR LOAD	ELECTRICAL LIGHT LEV	N	ES PWR PWR	LT	N	MEDICAL GASES MCA	DCA	LA	PA	MV	DHV	DLV	LDE	OX	NO	NI	WAGD	N	HVAC BL	AC	OA	TEMP SM	WN	RH	FL IN	F	EX	N
CRR01	CONFERENCE ROOM, RADIOLOGY	CP	GPT	AT1	2600	900	25	40	3	300	F	.	.	.	.	.	.	.	.	.	.	.	.	.	.	.	.	0	6	*	*	21	.	.	.	.	.
		CP	SSP	GPT	8-6	3-0	30		60	.	.			.													.				*	70					.
CSCQ1	CENTRAL STERILE, CART ASSEMBLY/QUEUING	VT	GLG	AT2	2700	B	35	40	5	50	.	.	.	.	.	.	.	.	.	.	.	.	.	.	.	.	.	-	6	1	*	20	.	.	.	Y	.
		SV	GPT	GLG	9-0	.	40		100	.	.			.													.				*	68					.
CSCR1	CENTRAL STERILE, SOILED CART, RECEIVING	VT	GLG	AT2	2700	900	35	40	5	100	.	.	.	.	.	.	.	.	.	.	.	.	.	.	.	.	.	+	6	1	*	20	.	.	.	.	.
		SV	.	GLG	9-0	3-0	40		100	.	.			.													.				*	68					.
CSDE1*	CENTRAL STERILE, DECONTAMINATION SMALL	SV	GLG	GLG	2700	1200	35	40	5	700	.	.	LS	U	.	.	.	.	.	.	.	.	.	.	.	.	.	-	10	2	*	20	.	14	.	Y	.
		ET	.	.	9'-0"	4'-0"	40		100	.	.			.													.				*	68					.
CSDE2*	CENTRAL STERILE, DECONTAMINATION MEDIUM	SV	GLG	GLG	2700	1200	35	40	5	300	F	.	LS	U	.	.	.	.		.	.	.	.	.	.	.	.	-	10	2	*	20	.	14	.	Y	.
		ET	.	.	9'-0"	4'-0"	40		100	700	.			.													.				*	68					.
CSDE3*	CENTRAL STERILE, DECONTAMINATION LARGE	SV	GLG	GLG	2700	1200	35	40	5	300	F	.	LS	U	.	.	.	.	.	.	.	.	.	.	.	.	.	-	10	2	*	20	.	14	.	Y	.
		ET	.	.	9'-0"	4'-0"	40		100	700	.			.													.				*	68					.
CSIA1	CENTRAL STERILE, ASSEMBLY, STERILIZATION, SMALL	SV	GLG	AT2	2700	1200	35	40	5	1100	.	.	.	U	1	.	.	.	1	.	.	.	.	.	1	.	.	+	6	1.5	*	20	.	14	.	.	.
		ET	GPT	GPT	9-0	4'-0"	40		100	.	.			.													.				*	68					.
CSIA2*	CENTRAL STERILE ASSEMBLY, STERILIZATION, MEDIUM	SV	GLG	AT2	2700	1200	35	40	5	700	F	.	.	U	1	.	.	.	1	.	.	.	.	.	1	.	.	+	6	1.5	*	20	.	14	.	.	.
		ET	GPT	GPT	9'-0"	4'-0"	40		100	1100	.			.													.				*	68					.
CSIA3*	CENTRAL STERILE ASSEMBLY, STERILIZATION, LARGE	SV	GLG	AT2	2700	1200	35	40	5	700	F	.	.	U	1	.	.	.	1	.	.	.	.	.	1	.	.	+	6	1.5	*	20	.	14	.	.	.
		ET	GPT	GPT	9'-0"	4'-0"	40		100	1100	.			.													.				*	68					.
CSSS1	CENTRAL STERILE, STERILIZATION, SMALL	SV	GLG	AT2	2700	1200	35	40	5	300	.	.	.	U	.	.	.	.	.	.	.	.	.	.	.	.	.	-	10	2.5	*	20	.	14	.	Y	M
		ET	.	GLG	9-0	4'-0"	40		100	.	.			.													.				*	68					.
CSSS2	CENTRAL STERILE, STERILIZATION, MEDIUM	SV	GLG	AT2	2700	1200	35	40	5	300	.	.	.	U	.	.	.	.	.	.	.	.	.	.	.	.	.	-	10	2.5	*	20	.	14	.	Y	M
		ET	.	GLG	9-0	4'-0"	40		100	.	.			.													.				*	68					.
CSSS3*	CENTRAL STERILE, STERILIZATION, LARGE	SV	GLG	AT2	2700	1200	35	40	5	300	F	.	.	U	.	.	.	.	.	.	.	.	.	.	.	.	.	-	10	2.5	*	20	.	14	.	Y	M
		ET	.	GLG	9'-0"	4'-0"	40		100	700	.			.													.				*	68					.
CSWS3*	CENTRAL STERILE, WASHER/SCOPE	SV	GLG	AT2	2700	1200	35	40	5	700	.	.	.	U	1	.	.	.	1	.	.	.	.	.	.	.	.	-	10	2.5	*	20	.	14	.	Y	M
		ET	.	GLG	9'-0"	4'-0"	40		100	.	.			.													.				*	68					.

Room Code	Room Name	ARCHITECTURAL MATRL+FIN FL	WL	CLG	CLG HT	DOOR SIZE	NOISE RM	SC	STRUCTURAL FLR LOAD	ELECTRICAL LIGHT LEV	N	ES PWR PWR	LT	N	MEDICAL GASES MCA	DCA	LA	PA	MV	DHV	DLV	LDE	OX	NO	NI	WAGD	N	HVAC BL	AC	OA	TEMP SM	WN	RH	FL IN	F	EX	N
CWSH1	CART WASH, MANUAL (STEAM GUN)	QT	GCT	GLG	2700	B	35	40	5	300	.	.	.	.	.	.	.	.	.	.	.	.	.	.	.	.	.	-	10	2.5	*	20	.	14	.	Y	M
		.	.	.	9-0	.	40		100	.	.			.													.				*	68					.
CWSH2	CART WASH, AUTOMATED WASHER	QT	GCT	GLG	2700	1200	35	40	C	300	.	.	.	.	.	.	.	.	.	.	.	.	.	.	.	.	.	-	10	2.5	*	20	.	14	.	Y	M
		.	.	.	9-0	4'-0"	40		C	.	.			.													.				*	68					.
DAYR1	DAYROOM, WARD	VT	GPT	AT1	2400	1200	35	40	3	150	.	.	.	.	.	.	.	.	.	.	.	.	.	.	.	.	.	0	6	2	*	20	.	14	.	.	.
		CP	.	.	8'-0"	4-0	40		60	.	.			.													.				*	68					.
DNPB1	DENT PROSTHETICS, ORTHODONTIC LAB	SV	GLG	AT1	2600	900	35	40	3	700	C	.	.	.	.	1	1	.	.	.	.	.	.	.	.	.	B	-	6	2	*	20	.	13	.	Y	M
		VT	GPT	.	8'-6"	3-0	40		60	.	.			.													L				*	68					.
DNPC1	DENT ROOM CERAMICS	SV	GLG	AT1	2600	1050	35	50	3	700	C	.	.	.	.	1	1	.	.	.	.	1	.	.	.	.	B	+	10	2.5	*	20	.	13	.	Y	M
		VT	GPT	.	8'-6"	3'-0"	40		60	.	.			.													L				*	68					.
DNPF1	DENT PROSTHETICS LAB, FULL FUNCT'N	SV	GLG	AT1	2600	900	35	40	3	700	C	.	.	U	.	1	1	.	.	.	.	1	.	.	.	.	B	-	10	2.5	*	20	.	13	.	Y	M
		VT	GPT	.	8'-6"	3-0	40		60	.	.			.													L				*	68					.
DNPL1	DENT PROSTHETICS LAB, LIMITED	SV	GLG	AT1	2600	900	35	40	3	700	C	.	.	U	.	1	1	.	.	.	.	1	.	.	.	.	B	-	10	2.5	*	20	.	13	.	Y	M
		VT	GPT	.	8'-6"	3-0	40		60	.	.			.													L				*	68					.
DNRS1	DENT REPAIR SHOP PER MAN	SV	GLG	AT1	2600	900	35	40	3	700	.	.	.	.	.	1	1	1	.	.	1	1	.	.	.	.	B	-	6	2.5	*	20	.	13	.	Y	M
		VT	GPT	.	8'-6"	3-0	40		60	.	.			.													.				*	68					.
DNSA1	DENTAL SUPPORT SUBSTERILE	SV	GLG	AT1	2600	900	35	40	3	500	.	.	.	.	.	1	2	.	.	.	1	1	.	.	.	.	B	0	6	2	*	20	.	13	.	.	.
		VT	GPT	.	8-6	3-0	40		60	.	.			.													.				*	68					.
DNSA2	DENTAL SUPPORT PROSTHETIC	SV	GLG	AT1	2600	900	35	40	3	500	.	.	.	.	.	1	2	.	.	.	1	1	.	.	.	.	B	0	6	2	*	20	.	.	.	.	.
		VT	GPT	.	8-6	3-0	40		60	.	.			.													.				*	68					.
DNSB1	DENTAL SUPPORT ORTHODONTICS	SV	GLG	AT1	2600	900	35	40	3	500	.	.	.	.	.	1	2	.	.	.	1	1	.	.	.	.	B	0	6	2	*	20	.	.	.	.	.
		VT	GPT	.	8-6	3-0	40		60	.	.			.													.				*	68					.
DNSC1	Dental, Instrument Decontamination	SV	GLG	AT2	2600	900	30	40	3	700	.	.	.	U	.	1	.	.	.	.	1	.	.	.	.	.	B	-	10	2	24	20	.	14	.	.	.
		ET	.	.	8-6	3-0	35		60	.	.			.													.				75	68					.
DNSC2	DENTAL, INSTRUMENT, STERILIZATION	SV	GLG	AT2	2600	900	30	40	3	700	.	.	.	U	.	1	.	.	.	.	1	.	.	.	.	.	B	+	6	2	24	20	.	14	.	.	.
		ET	.	.	8-6	3-0	35		60	.	.			.													.				75	68					.

APPENDIX A

ARCHITECTURAL AND ENGINEERING DESIGN REQUIREMENTS

Room Code	Room Name	ARCHITECTURAL MATRL+FIN FL	WL	CLG	CLG HT	DOOR SIZE	NOISE RM	SC	STRUCTURAL FLR LOAD	ELECTRICAL LIGHT LEV	N	ES PWR PWR	LT	N	MEDICAL GASES MCA	DCA	LA	PA	MV	DHV	DLV	LDE	OX	NO	NI	WAGD	N	HVAC BL	AC	OA	TEMP SM	WN	RH	FL IN	F	EX	N
DNSP1	DENTAL SELF PREP AREA	SV	GLG	AT1	2600	900	30	40	3	500	.	.	.	.	.	.	.	.	.	.	.	.	.	.	.	.	.	0	6	2	*	20	.	.	.	.	.
		.	GPT	.	8-6	3-0	35		60	.	.			.													.				*	68					.
DNSS1	DENTAL SUPPORT SUBSTERILE	SV	GLG	AT1	2600	900	30	40	3	500	.	.	.	.	.	1	2	.	.	.	1	1	.	.	.	.	B	0	6	2	*	20	.	13	.	.	.
		VT	.	.	8-6	3-0	35		60	.	.			.													.				*	68					.
DNTB1	DENTAL TREATMENT RM, ORTHODONTICS	SV	GLG	AT1	2600	900	30	40	3	1600	D	.	.	U	.	2	.	.	.	.	2	.	.	.	.	.	K	0	6	2	24	20	.	.	.	.	.
		.	.	.	8-6	3-0	35		60	.	F			.													.				75	68					.
DNTC1	DENTAL TREATMENT RM, COMPREHENSIVE	SV	GLG	AT1	2600	900	30	40	3	1600	D	.	.	U	.	2	.	.	.	1	2	.	1	1	1	1	D	++	12	3	24	20	.	14	.	.	I
		.	.	.	8-6	3-0	35		60	.	F			.													K				75	68					.
DNTE1	DENTAL TREATMENT RM, ENDODONTICS	SV	GLG	AT1	2600	900	30	40	3	1600	D	.	.	U	1	2	.	.	.	1	2	.	.	1	.	1	D	0	6	2	24	20	.	14	.	.	I
		.	GPT	.	8-6	3-0	35		60	.	F			.													K				75	68					.
DNTG1	DENTAL TREATMENT RM, GENERAL	SV	GLG	AT1	2600	900	30	40	3	1600	D	.	.	U	.	2	.	.	.	.	2	.	.	.	.	.	K	0	6	2	24	20	.	14	.	.	D
		VT	GPT	.	8-6	3-0	35		60	.	F			.													.				75	68					.
DNTG2	DENTAL TREATMENT RM, ORAL HYGIENE	SV	GLG	AT1	2600	900	30	40	3	1600	D	.	.	U	.	2	.	.	.	.	2	.	.	.	.	.	K	0	6	2	24	20	.	14	.	.	D
		VT	GPT	.	8-6	3-0	35		60	.	F			.													.				75	68					.
DNTG3	DENTAL TREATMENT RM, PATHOLOGY	SV	GLG	AT1	2600	900	30	40	3	1600	D	.	.	U	.	2	.	.	.	.	2	.	1	.	.	.	K	0	6	2	24	20	.	14	.	.	D
		VT	GPT	.	8-6	3-0	35		60	.	F			.													.				75	68					.
DNTP1	DENTAL TREATMENT RM, PROSTHODONTICS	SV	GLG	AT1	2600	900	30	40	3	1600	D	.	.	U	.	2	1	.	.	.	2	.	.	.	.	.	L	0	6	2	24	20	.	14	.	.	D
		VT	.	.	8-6	3-0	35		60	.	F			.													K				75	68					.
DNTP2	DENTAL TREATMENT RM, PERIODONTICS	SV	GLG	AT1	2600	900	30	40	3	1600	D	.	.	U	.	2	.	.	.	1	2	.	1	1	.	1	D	++	12	3	20	24	.	14	.	.	I
		VT	.	.	8-6	3-0	35		60	.	F			.													K				68	75					.
DNTP3	DENTAL TREATMENT RM, PEDIATRICS	SV	GLG	AT1	2600	900	30	40	3	1600	D	.	.	U	.	2	.	.	.	1	2	.	1	1	.	1	D	0	6	2	24	20	.	14	.	.	I
		VT	GPT	.	8-6	3-0	35		60	.	F			.													K				75	68					.
DNTR1*	DENTAL RECOVERY	SV	GLG	AT1	2600	1050	30	40	3	300	B	.	.	U	.	1	.	.	.	.	1	.	1	.	.	.	.	+	6	2	24	20	.	14	.	.	.
		VT	GPT	.	8'-6"	3'-6"	35		60	.	.			.													.				75	68					.
DNTS1	DENTAL TREATMENT RM, ORAL SURGERY	SV	GLG	GLG	2600	1050	30	40	3	2100	D	.	.	U	.	2	.	.	.	1	2	.	1	1	1	1	N	++	12	3	20	26	.	14	.	.	I
		.	.	.	8-6	3'-6"	35		60	.	F			.													D				68	78					.

Room Code	Room Name	ARCHITECTURAL MATRL+FIN FL	WL	CLG	CLG HT	DOOR SIZE	NOISE RM	SC	STRUCTURAL FLR LOAD	ELECTRICAL LIGHT LEV	N	ES PWR PWR	LT	N	MEDICAL GASES MCA	DCA	LA	PA	MV	DHV	DLV	LDE	OX	ON	NI	WAGD	N	HVAC BL	AC	OA	TEMP SM	WN	RH	FL IN	F	EX	N
DNTS2	DENT TREATMENT ORAL SURGERY SUPPORT	SV	GLG	AT1	2600	1050	30	40	3	700	.	.	.	U	.	.	.	.	.	.	.	.	.	.	.	.	.	0	6	2	24	20	.	14	.	.	.
		.	.	.	8-6	3'-6"	35		60	.	.			.													.				75	68					.
DNTT1	DENTAL TREATMENT RM, TRAINING	SV	GLG	AT1	2600	900	30	40	3	1600	D	.	.	U	.	2	.	.	.	.	2	.	.	.	.	.	.	++	12	3	24	20	.	14	.	.	I
		VT	.	.	8-6	3-0	35		60	.	F			.													K				75	68					.
DNXC1	DENT XRAY CEPHALOMETRICS	VT	GLG	AT1	2600	900	30	40	3	100	A	.	.	.	.	.	.	.	.	.	.	.	.	.	.	.	.	0	6	2	24	20	.	14	.	.	.
		SV	GPT	.	8-6	3-0	35		60	.	.			.													.				75	68					.
DNXD1	DENTAL XRAY, INTRAORAL/PANOGRAPH/CEPHALOMETRIC	VT	GLG	AT1	2600	1050	30	40	3	100	A	.	.	.	.	.	.	.	.	.	.	.	.	.	.	.	.	0	6	2	24	20	.	14	.	.	.
		SV	GPT	.	8-6	3'-6"	35		60	.	.			.													.				75	68					.
DNXF1	DENT XRAY FILM PROCESSING AUTO 1 PR	VT	GPT	AT1	2400	SP	30	40	3	200	G	.	.	.	.	.	.	.	.	.	.	.	.	.	.	.	.	-	10	2.5	24	20	.	.	.	Y	.
		SV	GLG	.	8-0	.	35		60	.	.			.													.				75	68					.
DNXF2	DENT XRAY FILM PROCESSING AUTO 2 PR	VT	GPT	AT1	2400	900	30	40	3	200	G	.	.	.	.	.	.	.	.	.	.	.	.	.	.	.	.	-	10	2.5	24	20	.	.	.	Y	.
		SV	GLG	.	8-0	3-0	35		60	.	.			.													.				75	68					.
DNXI1	DENT XRAY INTRAORAL	SV	GLG	AT1	2600	1050	30	40	3	100	A	.	.	.	.	.	.	.	.	.	.	.	.	.	.	.	.	0	6	2	24	20	.	14	.	.	.
		VT	GPT	.	8-6	3'-6"	35		60	.	.			.													.				75	68					.
DNXR1	DENT XRAY VIEWING	VT	GPT	AT1	2400	900	30	40	3	300	.	.	.	.	.	.	.	.	.	.	.	.	.	.	.	.	.	0	6	2	24	20	.	14	.	.	.
		SV	GLG	.	8-0	3-0	35		60	.	.			.													.				75	68					.
DOCK1	LOADING DOCK	CS	SSP	SSP	VAR	I	.	.	10	200	.	.	.	.	.	.	.	.	.	.	.	.	.	.	.	.	.	.	.	.	.	.	.	.	.	.	.
		.	.	.	VAR	.	.		200	.	.			.													.				.	.					.
DR001	DRESSING ROOM/CUBICLE	VT	GPT	AT1	2400	900	25	40	3	100	.	.	.	.	.	.	.	.	.	.	.	.	.	.	.	.	.	0	4	2	*	20	.	.	.	.	.
		CP	.	.	8-0	3-0	30		60	.	.			.													.				*	68					.
DUTY1	ON-CALL ROOM	VT	GPT	AT1	2400	900	25	40	3	300	.	.	.	.	.	.	.	.	.	.	.	.	.	.	.	.	.	0	6	2	*	20	.	.	.	.	.
		CP	.	.	8'-0"	3-0	30		60	.	.			.													.				*	68					.
EVPR1	EVOKED POTENTIAL RESPONSE ROOM	VT	GPT	AT1	2400	900	30	35	5	300	A	.	.	.	1	.	.	.	1	.	.	.	.	.	.	.	.	0	4	2	*	20	.	14	.	.	.
		.	.	.	8-0	3-0	35		100	.	C			.													.				*	68					.
EXEN1	EXAMINATION ROOM, ENT	VT	GPT	AT1	2400	900	30	45	3	500	C	.	.	.	.	.	.	.	.	.	.	.	.	.	.	.	.	0	4	2	*	23	.	14	.	.	.
		.	.	.	8-0	3-0	35		60	.	.			.													.				*	73					.

Room Code	Room Name	ARCHITECTURAL MATRL+FIN FL	WL	CLG	CLG HT	DOOR SIZE	NOISE RM	SC	STRUCTURAL FLR LOAD	ELECTRICAL LIGHT LEV	N	ES PWR PWR	LT	N	MEDICAL GASES MCA	DCA	LA	PA	MV	DHV	DLV	LDE	OX	NO	NI	WAGD	N	HVAC BL	AC	OA	TEMP SM	WN	RH	FL IN	F	EX	N
EXER1*	EXAM, EMERGENCY ROOM	VT	GPT	AT1	8'-0"	1200	30	45	3	500	C	.	.	.	.	.	.	.	1	.	.	.	1	.	.	.	.	0	4	2	*	23	.	14	.	.	.
		.	.	.	.	4'-0"	35		60	.	.			.													.				*	73					.
EXOS1	EXAM/OFFICE, SPEECH THERAPIST	VT	GAF	AT1	2400	900	25	50	3	500	C	.	.	.	.	.	.	.	.	.	.	.	.	.	.	.	.	0	4	2	*	23	.	14	.	.	.
		CP	.	.	8-0	3-0	30		60	.	.			.													.				*	73					.
EXPO1	EXAM ROOM, PODIATRY	VT	GPT	AT1	2400	900	30	45	3	500	C	.	.	.	.	.	.	.	.	.	.	.	.	.	.	.	.	0	4	2	*	23	.	14	.	.	.
		SV	.	.	8-0	3-0	35		60	.	.			.													.				*	73					.
EXRG1	EXAM ROOM, ARMY	VT	GPT	AT1	2400	900	30	45	3	500	C	.	.	.	.	.	.	.	.	.	.	.	.	.	.	.	.	0	4	2	*	23	.	14	.	.	.
		.	.	.	8-0	3-0	35		60	.	.			.													.				*	73					.
EXRG2*	EXAM ROOM, NAVY	VT	GPT	AT1	2400	900	30	45	3	500	C	.	.	.	.	.	.	.	.	.	.	.	.	.	.	.	.	0	4	2	*	23	.	14	.	.	.
		.	.	.	8'-0"	3'-0"	35		60	.	.			.													.				*	73					.
EXRG3*	EXAM ROOM, AIR FORCE	VT	GPT	AT1	2400	900	30	45	3	500	C	.	.	.	.	.	.	.	.	.	.	.	.	.	.	.	.	0	4	2	*	23	.	14	.	.	.
		.	.	.	8'-0"	3'-0"	35		60	.	.			.													.				*	73					.
EXRG4*	EXAM, ADULT SCREENING	VT	GPT	AT1	2400	900	30	45	3	500	C	.	.	.	.	.	.	.	.	.	.	.	.	.	.	.	.	0	4	2	*	23	.	14	.	.	.
		.	.	.	8'-0"	3'-0"	35		60	.	.			.													.				*	73					.
EXRG5*	EXAM, PEDIATRIC SCREENING	VT	GPT	AT1	2400	900	30	45	3	500	C	.	.	.	.	.	.	.	.	.	.	.	.	.	.	.	.	0	4	2	*	23	.	14	.	.	.
		.	.	.	8'-0"	3'-0"	35		60	.	.			.													.				*	73					.
EXRG6*	EXAM, ISOLATION, NEGATIVE PRESSURE	SV	GLG	GLG	2400	H	25	45	3	500	C	.	.	.	.	.	.	.	.	.	.	.	.	.	.	.	.	–	12	2	*	23	.	14	.	Y	.
		VT	GPT	GPT	8'-0"	.	30		60	1100	F			.													.				*	73					.
EXRG7*	EXAM, ISOLATION, POSITIVE PRESSURE	SV	GLG	GLG	2400	H	25	45	3	500	C	.	.	.	.	.	.	.	.	.	.	.	.	.	.	.	.	++	12	2	*	23	.	14	17	.	.
		VT	GPT	GPT	8'-0"	.	30		60	1100	F			.													.				*	73					.
EXRG8*	EXAM ROOM, OB/GYN	SV	GPT	AT1	2400	1200	25	45	3	500	C	.	.	.	.	.	.	.	.	.	.	.	.	.	.	.	.	0	4	2	*	23	.	14	.	.	.
		VT	GLG	.	8'-0"	4'-0"	30		60	.	.			.													.				*	73					.
EXRP1	EXAM ROOM, PEDIATRICS	VT	GPT	AT1	2400	900	30	45	3	500	C	.	.	.	.	.	.	.	.	.	.	.	.	.	.	.	.	0	4	2	*	23	.	14	.	.	.
		.	.	.	8-0	3-0	35		60	.	.			.													.				*	73					.
EXUD1	EXAM, URODYNAMICS	SV	GLG	AT2	2400	900	30	45	3	500	C	.	.	.	.	.	.	.	.	.	.	.	.	.	.	.	.	0	4	2	*	23	.	14	.	.	.
		VT	GPT	AT1	8-0	3-0	35		60	.	.			.													.				*	73					.

Room Code	Room Name	ARCHITECTURAL MATRL+FIN FL	WL	CLG	CLG HT	DOOR SIZE	NOISE RM	SC	STRUCTURAL FLR LOAD	ELECTRICAL LIGHT LEV	N	ES PWR PWR	LT	N	MEDICAL GASES MCA	DCA	LAA	PAA	MV	DHV	DLV	LDE	OX	NO	NI	WAGD	N	HVAC BL	AC	OA	TEMP SM	WN	RH	FL IN	F	EX	N
EXVE1	EXAM, VESTIBULAR (EAR EXAM ROOM)	VT	GPT	AT1	2400	900	25	50	3	500	C	.	.	.	.	.	.	.	.	.	.	.	.	.	.	.	.	0	4	2	*	23	.	14	.	.	.
		CP	GAF	.	8-0	3-0	30		60	.	.			.													.				*	73					.
EYCL1	EYE CONTACT LENS FITTING/DISPENSING	VT	GPT	AT1	2400	900	30	40	3	500	C	.	.	.	.	.	.	.	.	.	.	.	.	.	.	.	.	0	4	2	*	20	.	14	.	.	.
		.	.	.	8-0	3-0	35		60	.	.			.													.				*	68					.
EYEL1	EYELANE, ARMY/AIR FORCE	VT	GPT	AT1	2400	900	30	40	3	200	A	.	.	.	.	.	.	.	.	.	.	.	.	.	.	.	.	0	4	2	*	20	.	14	.	.	.
		.	.	.	8-0	3-0	35		60	.	C			.													.				*	68					.
EYEL2	EXAM/OFFICE, EYELANE, ARMY/AIRFORCE	VT	GPT	AT1	2400	900	30	45	3	200	C	.	.	.	.	.	.	.	.	.	.	.	.	.	.	.	.	0	4	2	*	20	.	14	.	.	.
		.	.	.	8-0	3-0	35		60	500	F			.													.				*	68					.
EYEL3*	EYE LANE, NAVY	VT	GPT	AT1	2400	900	30	40	3	200	A	.	.	.	.	.	.	.	.	.	.	.	.	.	.	.	.	0	4	2	*	20	.	14	.	.	.
		.	.	.	8'-0"	3'-0"	35		60	.	C			.													.				*	68					.
EYEL4*	EYE LANE, FOLDED ELECTRONIC	VT	GPT	AT1	2400	900	30	40	3	200	A	.	.	.	.	.	.	.	.	.	.	.	.	.	.	.	.	0	4	2	*	20	.	14	.	.	.
		.	.	.	8'-0"	3'-0"	35		60	.	C			.													.				*	68					.
EYER1	EYE ELECTRORETINOGRAPHY ROOM	VT	GPT	AT1	2400	900	30	40	3	200	A	.	.	.	.	.	.	.	.	.	.	.	.	.	.	.	.	0	4	2	*	20	.	14	.	.	.
		.	.	.	8-0	3-0	35		60	.	C			.													.				*	68					.
EYFC1	EYE FUNDUS CAMERA ROOM	VT	GPT	AT1	2400	900	30	40	3	200	A	.	.	.	.	.	.	.	.	.	.	.	.	.	.	.	.	0	4	2	*	20	.	14	.	.	.
		.	.	.	8-0	3-0	35		60	.	C			.													.				*	68					.
EYFD1	EYEGLASS FITTING & DISPENSING	VT	GPT	AT1	2400	900	30	40	3	500	C	.	.	.	.	.	.	.	.	.	.	.	.	.	.	.	.	0	4	2	*	20	.	14	.	.	.
		.	.	.	8-0	3-0	35		60	.	.			.													.				*	68					.
EYOF1*	EYE, OPTICAL FABRICATION	VT	GPT	AT1	2400	900	30	40	3	500	C	.	.	.	.	.	.	.	.	.	.	.	.	.	.	.	.	-	6	2	*	20	.	13	.	Y	M
		.	.	.	8'-0"	3'-0"	35		60	1000	F			.													.				*	68					.
EYOT2*	EYE, OPHTHALMOLOGY EXAM ROOM	VT	GPT	AT1	2400	900	30	45	3	200	A	.	.	.	.	.	.	.	.	.	.	.	.	.	.	.	.	0	4	2	*	20	.	14	.	.	.
		.	.	.	8'-0"	3'-0"	35		60	.	C			.													.				*	68					.
EYOT3*	PRK/LASIK EVALUATION ROOM	VT	GPT	AT1	2400	900	30	40	3	500	A	RA	LB	.	.	.	.	.	.	.	.	.	.	.	.	.	.	0	4	2	*	20	.	14	.	.	.
		.	.	.	8'-0"	3'-0"	35		60	1100	C			.													.				*	68					.
EYPL1	EYE PROSTHETICS LAB	VT	GPT	AT1	2400	900	30	40	3	500	.	.	.	.	.	.	.	.	.	.	.	.	.	.	.	.	.	0	4	2	*	20	.	14	.	.	.
		.	.	.	8-0	3-0	35		60	1100	.			.													.				*	68					.

Room Code	Room Name	ARCHITECTURAL MATRL+FIN FL	WL	CLG	CLG HT	DOOR SIZE	NOISE RM	SC	STRUCTURAL FLR LOAD	ELECTRICAL LIGHT LEV	N	ES PWR PWR	LT	N	MEDICAL GASES MCA	DCA	LA	PA	MV	DHV	DLV	LDE	OX	NO	NI	WAGD	N	HVAC BL	AC	OA	TEMP SM	WN	RH	FL IN	F	EX	N
EYVF1	EYE VISUAL FIELD/PERIMETRY ROOM	VT	GPT	AT1	2400	900	30	40	3	200	A	.	.	.	.	.	.	.	.	.	.	.	.	.	.	.	.	0	4	2	*	20	.	14	.	.	.
		.	.	.	8-0	3-0	35		60	.	C			.													.				*	68					.
EYVS1*	EYE, VISUAL SCREEN	VT	GPT	AT1	2400	900	30	40	3	500	C	.	.	.	.	.	.	.	.	.	.	.	.	.	.	.	.	0	4	2	*	20	.	14	.	.	.
		.	.	.	8'-0"	3'-0"	35		60	.	F			.													.				*	68					.
FILE1	FILE ROOM, GENERAL USE	VT	GPT	AT1	2400	900	35	40	7.5	150	.	.	.	.	.	.	.	.	.	.	.	.	.	.	.	.	.	0	4	2	*	20	.	.	.	.	.
		.	.	.	8-0	3-0	40		150	.	.			.													.				*	68					.
FSBR1	FOOD SERVICE, BAKE AND ROAST CENTER	QT	GLG	GLG	2700	B	35	50	B	700	.	.	.	.	.	.	.	.	.	.	.	.	.	.	.	.	.	0	10	2	*	20	.	.	.	Y	M
		.	.	AT2	9-0	B	40		B	.	.			.													.				*	68					.
FSCB1*	FOOD SERVICE, CARBONATED BEVERAGE ROOM	QT	GLG	GLG	2700	B	35	50	.	200	.	.	.	.	.	.	.	.	.	.	.	.	.	.	.	.	.	.	.	.	.	10	.	.	.	.	.
		.	.	AT2	9'-0"	.	40		.	.	.			.													.				.	50					.
FSCD1	FOOD SERVICE, CAFETERIA DINING ROOM	CP	GPT	AT1	2700	B	35	50	5	200	C	.	.	.	.	.	.	.	.	.	.	.	.	.	.	.	.	0	12	2	*	20	.	.	.	.	.
		VT	.	.	9-0	.	40		100	.	.			.													.				*	68					.
FSCS1	FOOD SERVICE, CART STORAGE	QT	GLG	GLG	2700	900	.	40	5	50	.	.	.	.	.	.	.	.	.	.	.	.	.	.	.	.	.	0	4	2	*	20	.	.	.	.	.
		.	.	.	9-0	3-0	.		100	.	.			.													.				*	68					.
FSDA1	FOOD SERVICE, DESSERT ASSEMBLY	QT	GLG	GLG	2700	900	35	50	5	700	.	.	.	.	.	.	.	.	.	.	.	.	.	.	.	.	.	0	10	2	*	20	.	13	.	.	.
		.	.	.	9-0	3-0	40		100	.	.			.													.				*	68					.
FSDS1	FOOD SERVICE, DISH STORAGE AREA	QT	GLG	GLG	2700	900	.	40	10	50	.	.	.	.	.	.	.	.	.	.	.	.	.	.	.	.	.	0	4	2	*	20	.	.	.	.	.
		.	.	.	9-0	3-0	.		200	.	.			.													.				*	68					.
FSDW1	FOOD SERVICE, DISH WASHING	QT	GLG	GLG	2700	900	35	50	B	500	.	.	.	.	.	.	.	.	.	.	.	.	.	.	.	.	.	-	10	2	*	20	.	.	.	Y	M
		.	.	.	9-0	3-0	40		B	.	.			.													.				*	68					.
FSFC1	FOOD SERVICE, FRY CENTER	QT	GLG	GLG	2700	900	35	50	B	700	.	.	.	.	.	.	.	.	.	.	.	.	.	.	.	.	.	-	10	2	*	20	.	13	.	Y	M
		.	.	.	9-0	3-0	40		B	.	.			.													.				*	68					.
FSFV1	FOOD SERVICE, FRESH FRUIT/VEGETABLE	QT	GLG	GLG	2700	900	35	50	5	700	.	.	.	.	.	.	.	.	.	.	.	.	.	.	.	.	.	0	10	2	*	20	.	13	.	.	.
		.	.	.	9-0	3-0	40		100	.	.			.													.				*	68					.
FSGB1	FOOD SERVICE, GRILL AND BROIL AREA	QT	GLG	GLG	2700	900	35	50	B	700	.	.	.	.	.	.	.	.	.	.	.	.	.	.	.	.	.	-	10	2	*	20	.	.	.	Y	M
		.	.	.	9-0	3-0	40		B	.	.			.													.				*	68					.

Room Code	Room Name	ARCHITECTURAL MATRL+FIN FL	WL	CLG	CLG HT	DOOR SIZE	NOISE RM	SC	STRUCTURAL FLR LOAD	ELECTRICAL LIGHT LEV	N	ES PWR PWR	LT	N	MEDICAL GASES MCA	DCA	LA	PA	MV	DHV	DLV	LDE	OX	NO	NI	WAGD	N	HVAC BL	AC	OA	TEMP SM	WN	RH	FL IN	F	EX	N
FSIR1	FOOD SERVICE, INGREDIENT ROOM	QT	GLG	GLG	2700	900	.	40	7.5	150	.	.	.	.	.	.	.	.	.	.	.	.	.	.	.	.	.	0	10	2	*	20	.	13	.	.	.
		.	.	.	9-0	3-0	.		150	.	.			.													.				*	68					.
FSMC1	FOOD SERVICE, MIXING CENTER	QT	GLG	GLG	2700	900	35	50	B	700	.	.	.	.	.	.	.	.	.	.	.	.	.	.	.	.	.	0	10	2	*	20	.	13	.	.	.
		CS	.	.	9-0	3-0	40		B	.	.			.													.				*	68					.
FSMP1	FOOD SERVICE, MEAT PROCESSING	QT	GLG	GLG	2700	900	35	50	B	700	.	.	.	.	.	.	.	.	.	.	.	.	.	.	.	.	.	0	10	2	*	20	.	13	.	.	.
		.	.	.	9-0	3-0	40		B	.	.			.													.				*	68					.
FSNP1	FOOD SERVICE, NOURISHMENT PREP AREA	QT	GLG	GLG	2700	900	35	50	B	500	.	.	.	.	.	.	.	.	.	.	.	.	.	.	.	.	.	0	10	2	*	20	.	13	.	.	.
		.	.	.	9-0	3-0	40		B	.	.			.													.				*	68					.
FSPP1	FOOD SERVICE, PASTRY PREPARATION	QT	GLG	GLG	2700	900	35	50	7.5	700	.	.	.	.	.	.	.	.	.	.	.	.	.	.	.	.	.	0	10	2	*	20	.	13	.	.	.
		.	.	.	9-0	3-0	40		150	.	.			.													.				*	68					.
FSPT1	FOOD SERVICE, PATIENT TRAY LINE	QT	GLG	GLG	2700	900	35	50	5	700	.	.	.	.	.	.	.	.	.	.	.	.	.	.	.	.	.	0	4	2	*	20	.	13	.	.	.
		.	.	.	9-0	3-0	40		100	.	.			.													.				*	68					.
FSPT2	FOOD SERVICE, PATIENT TRAY CAROUSEL	QT	GLG	GLG	2700	900	35	50	5	150	.	.	.	.	.	.	.	.	.	.	.	.	.	.	.	.	.	-	10	2	*	20	.	.	.	Y	.
		.	.	.	9-0	3-0	40		100	.	.			.													.				*	68					.
FSPW1	FOOD SERVICE, POT WASHING	QT	GLG	GLG	2700	900	35	50	B	300	.	.	.	.	.	.	.	.	.	.	.	.	.	.	.	.	.	-	10	2	*	20	.	.	.	Y	M
		.	.	.	9-0	3-0	40		B	.	.			.													.				*	68					.
FSSA1	FOOD SERVICE, SALAD ASSEMBLY	QT	GLG	GLG	2700	900	35	50	5	700	.	.	.	.	.	.	.	.	.	.	.	.	.	.	.	.	.	0	10	2	*	20	.	13	.	.	.
		.	.	.	9-0	3-0	40		100	.	.			.													.				*	68					.
FSSC1	FOOD SERVICE, STEAM CENTER	QT	GLG	GLG	2700	900	35	50	7.5	500	.	.	.	.	.	.	.	.	.	.	.	.	.	.	.	.	.	-	10	2	*	20	.	.	.	Y	M
		.	.	.	9-0	3-0	40		150	.	.			.													.				*	68					.
FSSL1	FOOD SERVICE, CAFETERIA SERVING	QT	GLG	GLG	2700	900	35	50	7.5	500	.	.	.	.	.	.	.	.	.	.	.	.	.	.	.	.	.	0	12	2	*	20	.	.	.	Y	.
		.	.	.	9-0	3-0	40		150	.	.			.													.				*	68					.
FSTD1	FOOD SERVICE, THERAPEUTIC DIET PREP	QT	GLG	GLG	2700	900	35	50	7.5	500	.	.	.	.	.	.	.	.	.	.	.	.	.	.	.	.	.	0	10	2	*	20	.	.	.	Y	.
		.	.	.	9-0	3-0	40		150	.	.			.													.				*	68					.
HAFR1	HEARING AID FITTING ROOM	VT	GAF	AT1	2700	900	20	40	3	500	.	.	.	.	.	.	.	.	.	.	.	.	.	.	.	.	.	0	4	1	*	20	.	.	.	.	.
		CP	.	.	9-0	3-0	25		60	.	.			.													.				*	68					.

Room Code	Room Name	ARCHITECTURAL MATRL+FIN FL	WL	CLG	CLG HT	DOOR SIZE	NOISE RM	SC	STRUCTURAL FLR LOAD	ELECTRICAL LIGHT LEV	N	ES PWR PWR	LT	N	MEDICAL GASES MCA	DCA	LA	PA	MV	DHV	DLV	LDE	OX	NO	NI	WAGD	N	HVAC BL	AC	OA	TEMP SM	WN	RH	FL IN	F	EX	N
HATL1	HEARING AID TESTING LAB/SHOP	VT	GPT	AT1	2700	900	30	40	3	700	.	.	.	.	.	.	.	.	.	.	.	.	.	.	.	.	.	0	4	1	*	20	.	.	.	.	.
		.	.	.	9-0	3-0	35		60	.	.			.													.				*	68					.
HYPR1*	HYPERBARIC CHAMBER ROOM	SSP	SSP	SSP	VAR	VAR	SSP	SSP	5	300	B	RA	LB	.	.	.	.	.	.	.	.	.	.	.	.	.	.	0	4	1	*	20	.	.	.	.	.
		.	.	.	VAR	VAR	SSP		100	1100	F			.													.				*	68					.
ICE01	ICE MACHINE	VT	GPT	AT1	2400	OPEN	35	40	B	150	.	.	.	E	.	.	.	.	.	.	.	.	.	.	.	.	.	0	6	1.5	*	20	.	.	.	Y	.
		CT	GPT	.	8-0	OPEN	40		B	.	.			U													.				*	68					.
JANC1	JANITORS' CLOSET	VT	CT	GPT	2400	900	40	40	5	50	.	.	.	.	.	.	.	.	.	.	.	.	.	.	.	.	.	-	10	.	.	.	.	.	.	Y	.
		CS	GPT	AT1	8-0	3-0	45		100	.	.			.													.				.	.					.
KEY01*	KEY/ACCESS CONTROL	VT	GPT	AT1	2400	900	30	40	3	500	.	.	.	S	.	.	.	.	.	.	.	.	.	.	.	.	.	0	4	1	*	20	.	.	.	.	.
		.	.	.	8'-0"	3'-0"	35		60	.	.			.													.				*	68					.
LBAP1	ALLERGEN PREPARATION	VT	GPT	AT1	2400	900	30	40	5	500	C	.	.	.	.	.	.	.	.	.	.	.	.	.	.	.	.	+	6	2	*	20	.	14	14	.	M
		SV	.	.	8-0	3-0	35		100	.	.			.													.				*	68					.
LBAR1	LAB AUTOPSY ROOM	CT	GLG	GLG	2700	1200	35	40	3	700	D	.	.	.	2	.	.	.	2	.	.	.	.	.	.	.	.	-	12	3	*	20	.	13	.	Y	M
		ET	.	.	9-0	4-0	40		60	1600	F			.													.				*	68					.
LBBD1	LAB BLOOD DONOR STATION	VT	GLG	AT2	2600	1200	35	40	3	500	C	.	LS	.	.	.	.	.	1	.	.	.	1	.	.	.	B	0	4	2	*	20	.	14	.	.	.
		SV	GPT	.	8-6	4-0	40		60	.	.			.													.				*	68					.
LBBD2	LABORATORY, BLOOD/PHORESIS PROCESSING	VT	GLG	AT2	2700	900	30	40	5	500	C	R	L	.	.	.	.	.	1	.	.	.	.	.	.	.	B	0	6	2	*	20	.	13	.	Y	.
		SV	GPT	.	9-0	3-0	35		100	.	.			.													.				*	68					.
LBBG2	LAB, BLOOD GAS	VT	GLG	AT2	2700	900	30	40	5	500	C	R	L	.	.	.	.	.	.	.	.	.	.	.	.	.	.	0	6	2	*	20	.	13	.	Y	.
		SV	GPT	.	9-0	3-0	35		100	1100	.			.													.				*	68					.
LBBP1	LAB BODY PREP ROOM	CT	GLG	GLG	2700	1200	35	40	5	500	C	.	.	.	.	.	.	.	.	.	.	.	.	.	.	.	.	-	10	2	*	20	.	13	.	Y	M
		ET	.	.	9-0	4'-0"	40		100	1100	.			.													.				*	68					.
LBBS1	LAB BLOOD SHIPPING - BASIC	VT	GLG	AT2	2700	900	35	40	5	500	C	.	LS	E	.	.	.	.	.	.	.	.	.	.	.	.	.	0	6	2	*	20	.	13	.	Y	.
		SV	GPT	.	9-0	3-0	40		100	.	.			.													.				*	68					.
LBBS2	LAB BLOOD SHIPPING - FROZEN BLOOD	SV	GLG	AT2	2700	900	30	40	5	500	C	.	LS	E	.	.	.	.	.	.	.	.	.	.	.	.	.	0	6	2	*	20	.	13	.	.	.
		.	.	.	9-0	3-0	35		100	1100	.			.													.				*	68					.

Room Code	Room Name	ARCHITECTURAL MATRL+FIN FL	WL	CLG	CLG HT	DOOR SIZE	NOISE RM	SC	STRUCTURAL FLR LOAD	ELECTRICAL LIGHT LEV	N	ES PWR PWR	LT	N	MEDICAL GASES MCA	DCA	LA	PA	MV	DHV	DLV	LDE	OX	NO	NI	WAGD	N	HVAC BL	AC	OA	TEMP SM	WN	RH	FL IN	F	EX	N
LBBV1	LAB BODY VIEWING ROOM	VT	GLG	AT2	2700	1200	30	40	5	500	.	.	.	.	.	.	.	.	.	.	.	.	.	.	.	.	.	-	12	3	*	20	.	13	.	Y	M
		SV	GPT	.	9-0	4'-0"	35		100	.	.			.													.				*	68					.
LBCP1	LAB CYTOGENETICS PREPARATION	SV	GLG	AT2	2700	900	35	40	5	500	C	R	L	.	.	.	.	.	.	.	.	.	.	.	.	.	.	0	6	2	*	20	.	13	.	Y	M
		.	.	.	9-0	3-0	40		100	1100	.			.													.				*	68					.
LBCR1	LAB CYTOGENETICS READING ROOM	VT	GPT	AT1	2700	900	30	40	5	500	A	R	L	.	.	.	.	.	.	.	.	.	.	.	.	.	.	0	6	2	*	20	.	13	.	Y	M
		.	.	.	9-0	3-0	35		100	.	C			.													.				*	68					.
LBDE1	LAB DERMATOLOGY	VT	GPT	AT2	2700	900	30	40	5	500	C	.	.	.	.	.	.	.	1	.	.	.	1	.	.	.	B	0	6	2	*	20	.	13	.	.	M
		SV	GLG	.	9-0	3-0	35		100	1100	.			.													.				*	68					.
LBDR1	LAB DECONTAMINATION ROOM	SV	GLG	AT2	2700	900	35	40	5	500	C	R	L	.	.	.	.	1	1	.	.	.	1	.	.	.	B	-	10	2	*	20	.	13	.	Y	M
		VT	.	.	9-0	3-0	40		100	1100	.			.													.				*	68					.
LBDS1	LAB BONE DISSECTION (ENT USE)	SV	GLG	AT2	2700	900	35	40	5	500	C	.	.	U	.	.	1	.	1	.	.	.	.	.	.	.	B	-	6	2	*	20	.	13	.	Y	M
		.	.	.	9-0	3-0	40		100	1100	.			.													.				*	68					.
LBEM2	LAB, ELECTRON MICROSCOPE	SV	GLG	AT2	2700	900	30	40	5	500	A	R	L	.	.	.	.	.	.	.	.	.	.	.	.	.	.	0	6	2	*	20	.	13	.	.	.
		.	.	.	9-0	3-0	35		100	.	.			.													.				*	68					.
LBEM3	LAB ELECTRON MICRO' SPECIMEN PREP	SV	GLG	AT2	2700	900	30	40	5	500	C	R	L	.	.	.	.	.	.	.	.	.	.	.	.	.	.	0	6	2	*	20	.	13	.	.	.
		.	.	.	9-0	3-0	35		100	1100	.			.													.				*	68					.
LBEN1	LAB ENTOMOLOGY	SV	GLG	AT2	2700	900	35	40	5	500	C	R	L	.	.	.	1	.	1	.	.	.	.	.	.	.	B	-	6	2	*	20	.	13	.	Y	M
		.	.	.	9-0	3-0	40		100	1100	.			.													.				*	68					.
LBFC1	LAB FLOW CYTOMETER ROOM	SV	GLG	AT2	2700	900	30	40	5	500	C	R	L	.	.	.	.	.	.	.	.	.	.	.	.	.	.	-	6	2	*	20	.	13	.	Y	M
		.	.	.	9-0	3-0	35		100	1100	.			.													.				*	68					.
LBGW1	LAB GLASSWARE WASHING ROOM	SV	GLG	GLG	2700	900	35	40	5	200	C	.	L	.	.	.	.	.	.	.	.	.	.	.	.	.	.	-	10	2.5	*	20	.	13	.	Y	M
		.	.	.	9-0	3-0	40		100	.	.			.													.				*	68					.
LBIH1	LAB INDUSTRIAL HYGIENE	SV	GLG	AT2	2700	900	35	40	5	500	C	.	.	.	.	.	.	.	1	.	.	.	.	.	.	.	B	-	6	2	*	20	.	13	.	Y	M
		.	.	.	9-0	3-0	40		100	1100	.			.													.				*	68					.
LBIR1	LAB INCUBATION ROOM WALK-IN	SV	GLG	GLG	2700	900	35	40	5	500	C	.	LS	E	.	.	.	.	1	.	.	.	.	.	.	.	B	+	6	2	*	20	.	13	.	Y	M
		.	.	.	9-0	3-0	40		100	1100	.			.													.				*	68					.

Room Code	Room Name	ARCHITECTURAL MATRL+FIN FL	WL	CLG	CLG HT	DOOR SIZE	NOISE RM	SC	STRUCTURAL FLR LOAD	ELECTRICAL LIGHT LEV	N	ES PWR PWR	LT	N	MEDICAL GASES MCA	DCA	LA	PA	MV	DHV	DLV	LDE	OX	NO	NI	WAGD	N	HVAC BL	AC	OA	TEMP SM	WN	RH	FL IN	F	EX	N
LBMR1	LAB MORGUE REFRIGERATOR	SV	GLG	GLG	2700	1050	.	40	C	150	.	.	LS	E	.	.	.	.	1	.	.	.	.	.	.	.	B	-	10	2	SP	.	.	.	.	Y	.
		PF	PF	SSP	9-0	3-6	.		C	.	.			.													.				.	.					.
LBMR2	LAB MORGUE REFRIGERATOR – WALK-IN	SV	GLG	GLG	2700	1050	35	40	C	150	.	.	LS	E	.	.	.	.	1	.	.	.	.	.	.	.	B	-	.	2	SP	.	.	.	.	.	.
		.	.	.	9-0	3-6	40		C	.	.			.													.				.	.					.
LBOB1	LAB OB/GYN CLINIC - SPECIMENS	SV	GLG	AT2	2700	900	30	40	5	500	C	R	L	.	.	.	.	.	.	.	.	.	.	.	.	.	.	0	6	2	*	20	.	13	.	Y	M
		.	.	.	9-0	3-0	35		100	1100	.			.													.				*	68					.
LBRB1	LAB RESEARCH BIOCHEMISTRY	SV	GLG	AT2	2700	900	30	40	5	500	C	.	LS	E	.	.	1	.	1	.	.	.	.	.	.	.	B	-	6	2	*	20	.	13	.	Y	M
		.	.	.	9-0	3-0	35		100	1100	.			.													.				*	68					.
LBRC1	LAB RESEARCH CLEAN	SV	GLG	AT2	2700	900	30	40	5	500	C	.	LS	E	.	.	1	.	1	.	.	.	.	.	.	.	B	+	6	2	*	20	.	13	.	.	M
		.	.	.	9-0	3-0	35		100	1100	.			.													.				*	68					.
LBRC2	LAB RESEARCH CONTAINMENT ROOM	SV	GLG	AT2	2700	900	30	40	3	500	C	.	LS	E	.	.	1	.	1	.	.	.	.	.	.	.	B	-	6	2	*	20	.	13	.	Y	M
		.	.	.	9-0	3-0	35		60	1100	.			.													.				*	68					.
LBRI1	LAB RADIOIMMUNOASSAY	SV	GLG	AT2	2700	900	30	40	5	500	C	.	LS	E	.	.	1	.	1	.	.	1	.	.	.	.	B	+	6	2	*	20	.	13	.	.	.
		.	.	.	9-0	3-0	35		100	1100	.			.													.				*	68					.
LBRP1	LAB RADIATION PROTECTION	SV	GLG	AT2	2700	900	30	40	5	500	C	.	.	.	.	.	.	.	.	.	.	.	.	.	.	.	.	0	6	2	*	20	.	13	.	.	.
		.	.	.	9-0	3-0	35		100	1100	.			.													.				*	68					.
LBSC1	LAB SMALL CLINIC - STANDARD	SV	GLG	AT2	2400	900	30	40	5	500	C	.	L	.	.	.	.	.	.	.	.	.	.	.	.	.	.	0	6	2	*	20	.	13	.	Y	M
		VT	.	.	8-0	3-0	35		100	1100	.			.													.				*	68					.
LBSM1	LAB SOLUTION & MEDIA PREP	SV	GLG	AT2	2700	900	30	40	5	500	C	R	L	.	.	.	1	.	1	.	.	.	.	.	.	.	B	+	6	2	*	20	.	14	17	.	M
		VT	GPT	AT1	9-0	3-0	35		100	.	.			.													.				*	68					.
LBSP1	LABORATORY, SATELLITE	SV	GLG	AT2	2400	900	30	40	5	300	.	.	LS	.	.	.	.	.	.	.	.	.	.	.	.	.	.	0	6	2	*	20	.	13	.	.	.
		.	.	.	8-0	3-0	35		100	.	.			.													.				*	68					.
LBSS1	LABORATORY, SHIPPING & RECEIVING MINIMAL	VT	GPT	AT1	2400	900	30	40	5	300	.	.	LS	.	.	.	.	.	.	.	.	.	.	.	.	.	.	0	6	2	*	20	.	13	.	.	.
		SV	.	.	8-0	3-0	35		100	.	.			.													.				*	68					.
LBSS2*	LABORATORY, SHIPPING/RECEIVING, SMALL	VT	GPT	AT1	2400	900	30	40	5	300	.	.	LS	.	.	.	.	.	.	.	.	.	.	.	.	.	.	0	6	2	*	20	.	13	.	.	.
		SV	.	.	8'-0"	3'-0"	35		100	.	.			.													.				*	68					.

Room Code	Room Name	ARCHITECTURAL MATRL+FIN FL	WL	CLG	CLG HT	DOOR SIZE	NOISE RM	SC	STRUCTURAL FLR LOAD	ELECTRICAL LIGHT LEV	N	ES PWR PWR	LT	N	MEDICAL GASES MCA	DCA	LA	PA	MV	DHV	DLV	DE	OX	NO	NI	WAGD	N	HVAC BL	AC	OA	TEMP SM	WN	RH	FL IN	F	EX	N
LBSS3*	LABORATORY, SHIPPING & RECEIVING, MEDIUM	VT	GPT	AT1	2400	900	30	40	5	300	.	.	LS	.	.	.	.	.	.	.	.	.	.	.	.	.	.	0	6	2	*	20	.	13	.	.	.
		SV	.	.	8'-0"	3'-0"	35		100	.	.			.													.				*	68					.
LBSS4*	LABORATORY, SHIPPING & RECEIVING, LARGE	VT	GPT	AT1	2400	900	30	40	5	300	.	.	LS	.	.	.	.	.	.	.	.	.	.	.	.	.	.	0	6	2	*	20	.	13	.	.	.
		SV	.	.	8'-0"	3'-0"	35		100	.	.			.													.				*	68					.
LBTS1	LAB TISSUE STORAGE AREA	VT	GPT	AT1	2700	900	30	40	5	300	.	.	LS	E	.	.	.	.	.	.	.	.	.	.	.	.	.	+	6	2	*	20	.	13	.	.	.
		SV	.	.	9-0	3-0	35		100	.	.			.													.				*	68					.
LBUL1	LAB ULTRA LOW TEMP FREEZER AREA	PF	SPF	SPF	2700	900	.	.	5	200	.	.	LS	E	.	.	.	.	.	.	.	.	.	.	.	.	.	+	6	2	SP	.	.	.	.	.	.
		.	.	.	9-0	3-0	.		100	.	.			.													.				.	.					.
LBUR1	LAB, UROLOGY, URINE	VT	GPT	AT1	2700	900	35	40	5	500	C	R	L	.	.	.	.	.	.	.	.	.	.	.	.	.	.	-	6	2	*	20	.	13	.	Y	M
		SV	GLG	.	9-0	3-0	40		100	1100	.			.													.				*	68					.
LBVP1	LAB VENIPUNCTURE	SV	GLG	AT1	2700	1200	30	40	5	700	C	R	L	.	.	.	.	.	.	.	.	.	.	.	.	.	.	0	6	2	*	20	.	14	.	.	.
		VT	GPT	.	9-0	4-0	35		100	1100	.			.													.				*	68					.
LBWA1	LAB WATER	SV	GLG	AT2	2700	900	30	40	5	300	.	.	.	.	.	.	.	.	.	.	.	.	.	.	.	.	.	0	6	2	*	20	.	13	.	.	.
		VT	.	.	9-0	3-0	35		100	.	.			.													.				*	68					.
LCCL1	LINEN CONTROL, CLEAN	VT	GPT	AT1	2400	900	35	40	7.5	300	.	.	.	.	.	.	.	.	.	.	.	.	.	.	.	.	.	0	4	2	*	20	.	14	.	.	.
		.	.	.	8'-0"	3-0	40		150	.	.			.													.				*	70					.
LCFA1	LINEN CONTROL, FOLDING AREA	VT	GPT	AT1	2400	900	35	40	7.5	300	.	.	.	.	.	.	.	.	.	.	.	.	.	.	.	.	.	0	4	2	*	20	.	14	.	.	.
		.	.	.	8'-0"	3-0	40		150	.	.			.													.				*	70					.
LCS01	LINEN CONTROL, SEAMSTRESS	VT	GPT	AT1	2400	900	35	40	7.5	1100	.	.	.	.	.	.	.	.	.	.	.	.	.	.	.	.	.	0	4	2	*	20	.	.	.	.	.
		.	.	.	8'-0"	3-0	40		150	.	.			.													.				*	70					.
LCSL1	LINEN CONTROL, SOILED LINEN	VT	GPT	AT1	2400	900	35	40	5	200	.	.	.	.	.	.	.	.	.	.	.	.	.	.	.	.	.	-	10	2	*	20	.	.	.	Y	.
		.	GLG	.	8'-0"	3-0	40		100	.	.			.													.				*	68					.
LCUC1	LINEN CONTROL, UNIFORM CONVEYOR	VT	GPT	AT1	2700	900	35	40	5	200	.	.	.	.	.	.	.	.	.	.	.	.	.	.	.	.	.	0	4	2	*	20	.	.	.	.	.
		SV	GLG	AT2	9-0	3-0	40		100	.	.			.													.				*	70					.
LDAT1	LABOR & DELIVERY, ANTEPARTUM TESTING	VT	GLG	AT1	2700	1200	30	45	3	500	C	R	L	.	1	.	.	.	3	.	.	.	1	.	.	.	B	0	6	2	24	24	.	14	.	.	.
		SV	GPT	AT2	9-0	4-0	35		60	1100	.			.													.				75	75					.

Room Code	Room Name	ARCHITECTURAL MATRL+FIN FL	WL	CLG	CLG HT	DOOR SIZE	NOISE RM	SC	STRUCTURAL FLR LOAD	ELECTRICAL LIGHT LEV	N	ES PWR PWR	LT	N	MEDICAL GASES MCA	DCA	LA	PA	MV	DHV	DLV	LDE	OX	NO	NI	WAGD	N	HVAC BL	AC	OA	TEMP SM	WN	RH	FL IN	F	EX	N
LDDR1	LABOR & DELIVERY, C SECTION ROOM	ET	GCT	GLG	3000	J	30	45	3	2100	D	RA	LB	.	7	.	.	.	13	.	.	.	5	2	2	2	C	++	25	5	R	R	Y	14	14	.	C
		SV	GLG	.	10-0	.	35		60	.	.			.													D				R	R					P
LDEP1	LABOR & DELIVERY, EXAM & PREP	VT	GLG	AT2	2400	1200	30	45	3	500	C	R	L	.	1	.	.	.	1	.	.	.	1	.	.	.	B	0	6	2	24	24	.	14	.	.	.
		SV	.	.	8-0	4-0	35		60	1100	.			.													.				75	75					.
LDRP1*	LABOR & DELIVERY, LDRP (NARROW)	SV	GLG	AT1	2700	1200	30	45	3	300	D	RA	LB	.	.	.	.	.	2	.	.	.	2	.	.	.	E	0	6	2	24	24	.	14	.	.	.
		SSP	SSP	.	9'-0"	4'-0"	35		60	2100	F			.													.				75	75					.
LDRP2*	LABOR & DELIVERY, LDRP (WIDE)	SV	GLG	AT1	2700	1200	30	45	3	300	D	RA	LB	.	.	.	.	.	2	.	.	.	2	.	.	.	E	0	6	2	24	24	.	14	.	.	.
		SSP	SSP	.	9'-0"	4'-0"	35		60	2100	F			.													.				75	75					.
LDRP3*	LDR/LDRP ISOLATION ROOM	SV	GLG	GPT	2700	1200	30	45	3	300	D	RA	LB	.	.	.	.	.	2	.	.	.	2	.	.	.	E	--	12	2	24	24	Y	14	.	Y	E
		SSP	SSP	GLG	9'-0"	4'-0"	35		60	2100	F			.													.				75	75					.
LIBB1	LIBRARY, BOOK STACK AREA	CP	GAF	AT1	3000	OPEN	25	45	D	300	.	.	.	.	.	.	.	.	.	.	.	.	.	.	.	.	.	0	4	1	*	20	.	.	.	.	.
		VT	GPT	.	10-0	OPEN	30		D	.	.			.													.				*	68					.
LIBD1	LIBRARY, REFERENCE DESK	CP	GAF	AT1	3000	900	25	45	5	500	.	.	.	.	.	.	.	.	.	.	.	.	.	.	.	.	.	0	4	1	*	20	.	.	.	.	.
		.	GPT	.	10-0	3-0	30		100	.	.			.													.				*	68					.
LIBP1	LIBRARY, PERIODICALS STACKS	CP	GAF	AT1	3000	900	25	45	D	500	.	.	.	.	.	.	.	.	.	.	.	.	.	.	.	.	.	0	4	1	*	20	.	.	.	.	.
		.	GPT	.	10-0	3-0	30		D	.	.			.													.				*	68					.
LIBS1	LIBRARY, SEATING AREA	CP	GAF	AT1	3000	900	25	45	3	500	.	.	.	.	.	.	.	.	.	.	.	.	.	.	.	.	.	0	6	1.5	*	20	.	.	.	.	.
		.	GPT	.	10-0	3-0	30		60	.	.			.													.				*	68					.
LIBV1	LIBRARY, PATIENT RESOURCE ROOM	CP	GAF	AT1	3000	900	25	45	7.5	500	.	.	.	.	.	.	.	.	.	.	.	.	.	.	.	.	.	0	4	1	*	20	.	.	.	.	.
		.	GPT	.	10-0	3-0	30		150	.	.			.													.				*	68					.
LIBW1	LIBRARY, WORK AREA - LIBRARY STAFF	CP	GPT	AT1	2700	900	25	45	5	700	.	.	.	.	.	.	.	.	.	.	.	.	.	.	.	.	.	0	4	1	*	20	.	.	.	.	.
		VT	GAF	.	9-0	3-0	30		100	.	.			.													.				*	68					.
LMAB1	LABORATORY, ANAEROBIC BACT' - TB	SV	GLG	GLG	2700	900	30	40	5	500	C	R	L	.	.	.	1	.	1	.	.	.	.	.	.	.	B	-	6	2	*	20	.	13	.	Y	M
		.	.	.	9-0	3-0	35		100	1100	.			.													.				*	68					.
LMBB1	LABORATORY, BLOOD BANK, SMALL	SV	GLG	AT2	2700	900	30	40	5	500	C	.	LS	E	.	.	.	.	.	.	.	.	.	.	.	.	.	0	6	2	*	20	.	13	.	.	.
		.	.	.	9-0	3-0	35		100	1100	.			.													.				*	68					.

Room Code	Room Name	ARCHITECTURAL MATRL+FIN FL	WL	CLG	CLG HT	DOOR SIZE	NOISE RM	SC	STRUCTURAL FLR LOAD	ELECTRICAL LIGHT LEV	N	ES PWR PWR	LT	N	MEDICAL GASES MCA	DCA	LAA	PAA	MV	DHV	DLV	LDE	OX	NO	NI	WAGD	N	HVAC BL	AC	OA	TEMP SM	WN	RH	FL IN	F	EX	N
LMBB2	LABORATORY, BLOOD BANK, MEDIUM	SV	GLG	AT2	2700	900	30	40	C	500	C	.	LS	E	.	.	.	.	.	.	.	.	.	.	.	.	.	0	6	2	*	20	.	13	.	.	.
		.	.	.	9-0	3-0	35		C	1100	.			.													.				*	68					.
LMBB3	LABORATORY, BLOOD BANK, LARGE	SV	GLG	AT2	2700	900	30	40	C	500	C	.	LS	E	.	.	.	.	.	.	.	.	.	.	.	.	.	0	6	2	*	20	.	13	.	.	.
		.	.	.	9-0	3-0	35		C	1100	.			.													.				*	68					.
LMCH1	LABORATORY, CHEMISTRY, MINIMAL	SV	GLG	AT2	2700	900	35	40	C	500	C	R	L	.	.	.	1	.	1	.	.	.	.	.	.	.	B	-	6	2	*	20	.	13	.	Y	M
		.	.	.	9-0	3-0	40		C	1100	.			.													.				*	68					.
LMCH2	LABORATORY, CHEMISTRY, SMALL	SV	GLG	AT2	2700	900	35	40	5	500	C	R	L	.	.	.	1	.	1	.	.	.	.	.	.	.	B	-	6	2	*	20	.	13	.	Y	M
		.	.	.	9-0	3-0	40		100	1100	.			.													.				*	68					.
LMCH3	LABORATORY, CHEMISTRY, MEDIUM	SV	GLG	AT2	2700	900	35	40	5	500	C	R	L	.	.	.	1	.	1	.	.	.	.	.	.	.	B	-	6	2	*	20	.	13	.	Y	M
		.	.	.	9-0	3-0	40		100	1100	.			.													.				*	68					.
LMCH4*	LABORATORY, CHEMISTRY, LARGE	SV	GLG	GLG	2700	900	35	40	5	500	C	R	L	.	.	.	1	.	1	.	.	.	.	.	.	.	B	-	6	2	*	20	.	13	.	Y	M
		VT	GPT	AT2	9'-0"	3'-0"	40		100	1100	.			.													.				*	68					.
LMCY1	LABORATORY, CYTOLOGY, SMALL	SV	GLG	AT2	2700	900	35	40	5	500	C	R	L	.	.	.	1	.	1	.	.	.	.	.	.	.	B	-	6	2	*	20	.	13	.	Y	M
		VT	.	.	9-0	3-0	40		100	1100	.			.													.				*	68					.
LMCY3	LABORATORY, CYTOLOGY, LARGE	SV	GLG	AT2	2700	900	35	40	5	500	C	R	L	.	.	.	1	.	1	.	.	.	.	.	.	.	B	-	6	2	*	20	.	13	.	Y	M
		VT	.	.	9-0	3-0	40		100	1100	.			.													.				*	68					.
LMHC1	LABORATORY, HISTOPATHOLOGY, MEDIUM	SV	GLG	AT2	2700	900	35	40	5	500	C	R	L	E	.	.	1	.	1	.	.	.	.	.	.	.	B	-	6	2	*	20	.	13	.	Y	M
		VT	.	.	9-0	3-0	40		100	1100	.			.													.				*	68					.
LMHC2*	LABORATORY, HISTOPATHOLOGY, LARGE	SV	GLG	AT2	2700	900	35	40	5	500	C	R	L	E	.	.	1	.	1	.	.	.	.	.	.	.	B	-	6	2	*	20	.	13	.	Y	M
		VT	.	.	9'-0"	3'-0"	40		100	1100	.			.													.				*	68					.
LMHI1	LABORATORY, HEMATOLOGY, MINIMAL	SV	GLG	AT2	2700	900	35	40	5	500	C	R	L	E	.	.	1	.	1	.	.	.	.	.	.	.	B	-	6	2	*	20	.	13	.	Y	M
		VT	.	.	9-0	3-0	40		100	1100	.			.													.				*	68					.
LMHI2*	LABORATORY, HEMOTOLOGY, SMALL	SV	GLG	GLG	2700	900	35	40	5	500	C	R	L	E	.	.	1	.	1	.	.	.	.	.	.	.	B	-	6	2	*	20	.	13	.	Y	M
		VT	.	AT2	9'-0"	3'-0"	40		100	1100	.			.													.				*	68					.
LMHI3*	LABORATORY, HEMOTOLOGY, MEDIUM	SV	GLG	GLG	2700	900	35	40	5	500	C	R	L	E	.	.	1	.	1	.	.	.	.	.	.	.	B	-	6	2	*	20	.	13	.	Y	M
		VT	.	AT2	9'-0"	3'-0"	40		100	1100	.			.													.				*	68					.

Room Code	Room Name	ARCHITECTURAL MATRL+FIN FL	WL	CLG	CLG HT	DOOR SIZE	NOISE RM	SC	STRUCTURAL FLR LOAD	ELECTRICAL LIGHT LEV	N	ES PWR PWR	LT	N	MEDICAL GASES MCA	DCA	LA	PA	MV	DHV	DLV	LDE	OX	NO	NI	WAGD	N	HVAC BL	AC	OA	TEMP SM	WN	RH	FL IN	F	EX	N
LMHI4*	LABORATORY, HEMOTOLOGY, LARGE	SV	GLG	GLG	2700	900	35	40	5	500	C	R	L	E	.	.	1	.	1	.	.	.	.	.	.	.	B	-	6	2	*	20	.	13	.	Y	M
		VT	.	AT2	9'-0"	3'-0"	40		100	1100	.			.													.				*	68					.
LMHS1	LABORATORY, HISTOLOGY, SMALL	SV	GLG	GLG	2700	900	35	40	5	500	C	R	L	E	.	.	1	.	1	.	.	.	.	.	.	.	B	-	6	2	*	20	.	13	.	Y	M
		VT	.	AT2	9-0	3-0	40		100	1100	.			.													.				*	68					.
LMHS2	LABORATORY, HISTOLOGY, LARGE	SV	GLG	GLG	2700	900	35	40	5	500	C	R	L	E	.	.	1	.	1	.	.	.	.	.	.	.	B	-	6	2	*	20	.	13	.	Y	M
		VT	.	AT2	9-0	3-0	40		100	1100	.			.													.				*	68					.
LMM01	LABORATORY, MICROBIOLOGY, MINIMAL	SV	GLG	GLG	2700	900	35	40	5	500	C	R	L	.	.	.	1	.	1	.	.	.	.	.	.	.	B	-	6	2	*	20	.	13	.	Y	M
		VT	.	AT2	9-0	3-0	40		100	1100	.			.													.				*	68					.
LMM02	LABORATORY, MICROBIOLOGY, SMALL	SV	GLG	GLG	2700	900	35	40	5	500	C	R	L	.	.	.	1	.	1	.	.	.	.	.	.	.	B	-	6	2	*	20	.	13	.	Y	M
		VT	.	AT2	9-0	3-0	40		100	1100	.			.													.				*	68					.
LMM03	LABORATORY, MICROBIOLOGY, MEDIUM	SV	GLG	GLG	2700	900	35	40	5	500	C	R	L	.	.	.	1	.	1	.	.	.	.	.	.	.	B	-	6	2	*	20	.	13	.	Y	M
		VT	.	AT2	9-0	3-0	40		100	1100	.			.													.				*	68					.
LMM04*	LABORATORY, MICROBIOLOGY, LARGE	SV	GLG	GLG	2700	900	35	40	5	500	C	R	L	E	.	.	1	.	1	.	.	.	.	.	.	.	B	-	6	2	*	20	.	13	.	Y	M
		VT	.	AT2	9'-0"	3'-0"	40		100	1100	.			.													.				*	68					.
LMMP1	LABORATORY MICROBIOLOGY/PARASITIOLOGY	SV	GLG	GLG	2700	900	35	40	5	500	C	R	L	.	.	.	1	.	1	.	.	.	.	.	.	.	B	-	6	2	*	20	.	13	.	Y	M
		VT	.	.	9-0	3-0	40		100	1100	.			.													.				*	68					.
LMMY1	LABORATORY MYCOLOGY	SV	GLG	GLG	2700	900	35	40	5	500	C	R	L	.	.	.	1	.	1	.	.	.	.	.	.	.	B	-	6	2	*	20	.	13	.	Y	M
		VT	.	AT2	9-0	3-0	40		100	1100	.			.													.				*	68					.
LMS01	LABORATORY, SEROLOGY, SMALL	SV	GLG	GLG	2700	900	35	40	5	500	C	R	L	.	.	.	1	.	1	.	.	.	.	.	.	.	B	-	6	2	*	20	.	13	.	Y	M
		VT	.	AT2	9-0	3-0	40		100	1100	.			.													.				*	68					.
LMS03	LABORATORY, SEROLOGY, LARGE	SV	GLG	GLG	2700	900	35	40	5	500	C	R	L	.	.	.	1	.	1	.	.	.	.	.	.	.	B	-	6	2	*	20	.	13	.	Y	M
		VT	.	AT2	9-0	3-0	40		100	1100	.			.													.				*	68					.
LMT01	LABORATORY, TOXICOLOGY	SV	GLG	GLG	2700	900	35	40	5	500	C	R	L	.	.	.	1	.	1	.	.	.	.	.	.	.	B	-	6	2	*	20	.	13	.	Y	M
		VT	.	AT2	9-0	3-0	40		100	1100	.			.													.				*	68					.
LMU01	LABORATORY, URINALYSIS, MINIMAL	SV	GLG	GLG	2700	900	35	40	5	500	C	R	L	.	.	.	1	.	1	.	.	.	.	.	.	.	B	-	6	2	*	20	.	13	.	Y	M
		VT	.	AT2	9-0	3-0	40		100	1100	.			.													.				*	68					.

Room Code	Room Name	ARCHITECTURAL MATRL+FIN FL	WL	CLG	CLG HT	DOOR SIZE	NOISE RM	SC	STRUCTURAL FLR LOAD	ELECTRICAL LIGHT LEV	N	ES PWR PWR	LT	N	MEDICAL GASES MCA	DCA	LA	PA	MV	DHV	DLV	LDE	OX	ON	NI	WAGD	N	HVAC BL	AC	OA	TEMP SM	WN	RH	FL IN	F	EX	N
LMU02	LABORATORY, URINALYSIS, SMALL	SV	GLG	GLG	2700	900	35	40	5	500	C	R	L	.	.	.	1	.	1	.	.	.	.	.	.	.	B	-	6	2	*	20	.	13	.	Y	M
		VT	.	AT2	9-0	3-0	40		100	1100	.			.													.				*	68					.
LMU03	LABORATORY, URINALYSIS, MEDIUM	SV	GLG	GLG	2700	900	35	40	5	500	C	R	L	.	.	.	1	.	1	.	.	.	.	.	.	.	B	-	6	2	*	20	.	13	.	Y	M
		VT	.	AT2	9-0	3-0	40		100	1100	.			.													.				*	68					.
LMU04*	LABORATORY, URINALYSIS, LARGE	SV	GLG	GLG	2700	900	35	40	5	500	C	R	L	.	.	.	1	.	1	.	.	.	.	.	.	.	B	-	6	2	*	20	.	13	.	Y	M
		VT	.	AT2	9'-0"	3'-0"	40		100	1100	.			.													.				*	68					.
LMV01	LABORATORY, VIROLOGY, SMALL	SV	GLG	GLG	2700	900	35	40	5	500	C	R	L	.	.	.	1	.	1	.	.	.	.	.	.	.	B	-	6	2	*	20	.	13	.	Y	M
		.	.	AT2	9-0	3-0	40		100	1100	.			.													.				*	68					.
LMV02	LABORATORY, VIROLOGY, LARGE	SV	GLG	GLG	2700	900	35	40	5	500	C	R	L	.	.	.	1	.	1	.	.	.	.	.	.	.	B	-	6	2	*	20	.	13	.	Y	M
		VT	.	AT2	9-0	3-0	40		100	1100	.			.													.				*	68					.
LOB01	LOBBY	VT	GPT	AT1	VAR	SP	35	40	5	150	.	.	.	.	.	.	.	.	.	.	.	.	.	.	.	.	.	0	6	2	*	20	.	.	.	.	.
		SP	SSP	SSP	VAR	.	40		100	.	.			.													.				*	68					.
LOB02*	LOBBY, VESTIBULE	VT	GPT	AT1	VAR	SP	.	.	5	150	.	.	.	.	.	.	.	.	.	.	.	.	.	.	.	.	.	+	6	2	*	20	.	.	.	.	.
		SP	SSP	SSP	VAR	.	.		100	.	.			.													.				*	68					.
LR001	LOCKER AREA, PERSONAL PROPERTY	VT	GLG	GLG	2400	900	30	40	5	200	.	.	.	.	.	.	.	.	.	.	.	.	.	.	.	.	.	0	4	1	*	20	.	.	.	.	.
		SSP	CT	AT2	8-0	3-0	35		100	.	.			.													.				*	68					.
LR002	LOCKER ROOM, CHANGING	VT	GLG	GLG	2400	900	30	40	5	200	.	.	.	.	.	.	.	.	.	.	.	.	.	.	.	.	.	-	10	2	*	20	.	.	.	.	.
		CT	CT	AT2	8-0	3-0	35		100	.	.			.													.				*	68					.
MECH1*	MECHANICAL ROOMS	CS	SSP	SSP	VAR	VAR	50	55	B	300	.	R	LS	S	.	.	.	.	.	.	.	.	.	.	.	.	.	.	.	.	.	10	.	.	.	.	K
		.	.	.	VAR	VAR	70		B	.	.			.													.				.	50					.
MECH2*	AIR HANDLING ROOMS	CS	SSP	SSP	VAR	VAR	50	55	B	300	.	R	LS	S	.	.	.	.	.	.	.	.	.	.	.	.	.	.	.	.	.	10	.	.	.	.	K
		.	.	.	VAR	VAR	70		B	.	.			.													.				.	50					.
MEDP1	MEDICATION PREPARATION STATION	VT	GLG	AT2	2400	900	30	45	5	1100	C	R	L	.	.	.	.	.	.	.	.	.	.	.	.	.	.	0	4	1	*	21	.	90	.	.	.
		.	GPT	AT1	8-0	3-0	35		100	.	.			.													.				*	70					.
MICL1	MEDICAL ILLUS, COPY LABORATORY	VT	GPT	AT1	2400	900	30	40	5	500	C	.	.	.	.	.	.	.	.	.	.	.	.	.	.	.	.	0	4	1	*	20	.	.	.	.	.
		SV	.	.	8-0	3-0	35		100	1100	.			.													.				*	68					.

Room Code	Room Name	ARCHITECTURAL MATRL+FIN FL	WL	CLG	CLG HT	DOOR SIZE	NOISE RM	SC	STRUCTURAL FLR LOAD	ELECTRICAL LIGHT LEV	N	ES PWR PWR	LT	N	MEDICAL GASES MCA	DCA	LA	PA	MV	DHV	DLV	LDE	OX	NO	NI	WAGD	N	HVAC BL	AC	OA	TEMP SM	WN	RH	FL IN	F	EX	N
MIDR1	MEDICAL ILLUS, DARKROOM, DUAL	VT	GLG	GPT	2400	L	30	40	5	150	G	.	.	.	.	.	.	.	.	.	.	.	.	.	.	.	.	-	10	2	24	20	.	.	.	Y	.
		SV	.	.	8-0	.	35		100	.	.			.													.				75	68					.
MIPF1	MEDICAL ILLUS, PHOTO FINISH	VT	GLG	GPT	2400	900	30	40	5	500	C	.	.	.	.	.	.	.	.	.	.	.	.	.	.	.	.	0	4	1	*	20	.	.	.	.	.
		SV	.	.	8-0	3-0	35		100	1100	.			.													.				*	68					.
MIPP1	MEDICAL ILLUS, PRINT PROCESS DUAL	VT	GLG	GPT	2400	900	30	40	5	500	C	.	.	.	.	.	.	.	.	.	.	.	.	.	.	.	.	0	6	1.5	*	20	.	.	.	.	.
		SV	.	.	8-0	3-0	35		100	.	.			.													.				*	68					.
MIST1	MEDICAL ILLUS, STUDIO	VT	GPT	GPT	2400	900	30	40	5	500	C	.	.	.	.	.	.	.	.	.	.	.	.	.	.	.	.	0	4	1	*	20	.	.	.	.	.
		SV	GLG	.	8-0	3-0	35		100	1600	.			.													.				*	68					.
MMCR1	MEDICAL MATERIAL CART RECEIVING	VT	GPT	AT1	3000	E	35	50	5	50	.	.	.	.	.	.	.	.	.	.	.	.	.	.	.	.	.	0	4	1	*	20	.	.	.	.	.
		.	.	.	10-0	.	40		100	.	.			.													.				*	68					.
MMCR2	MEDICAL MATERIAL CART RESTOCKING AREA	VT	GPT	AT1	3000	E	35	50	5	50	.	.	.	.	.	.	.	.	.	.	.	.	.	.	.	.	.	0	4	1	*	20	.	.	.	.	.
		.	.	.	10-0	.	40		100	.	.			.													.				*	68					.
MMGS1	MEDICAL MATERIAL GENERAL STORAGE	VT	GPT	AT1	B	1200	35	50	6	100	.	.	.	.	.	.	.	.	.	.	.	.	.	.	.	.	.	0	4	1	*	20	.	.	.	.	.
		.	.	.	.	4-0	40		125	.	.			.													.				*	68					.
MMRP1	MEDICAL MATERIAL RECEIVING/PROCESS	VT	GPT	AT1	B	1200	35	50	5	200	.	.	.	.	.	.	.	.	.	.	.	.	.	.	.	.	.	0	4	1	24	10	.	.	.	.	.
		.	.	.	.	4-0	40		100	.	.			.													.				75	55					.
MRMB1	MAIL ROOM, DISTRIBUTION AREA	VT	GPT	AT1	2700	900	35	50	5	500	.	.	.	.	.	.	.	.	.	.	.	.	.	.	.	.	.	0	4	1	*	20	.	.	.	.	.
		.	.	.	9-0	3-0	40		100	.	.			.													.				*	68					.
MRPS1	MAIL ROOM, U.S. POST OFFICE	VT	GPT	AT1	2700	900	35	50	5	500	.	.	.	.	.	.	.	.	.	.	.	.	.	.	.	.	.	0	4	1	*	20	.	.	.	.	.
		.	.	.	9-0	3-0	40		100	.	.			.													.				*	68					.
MRRS1	MAIL ROOM, RECEIVING/SORTING	VT	GPT	AT1	2700	B	35	50	6	500	.	.	.	.	.	.	.	.	.	.	.	.	.	.	.	.	.	0	4	1	*	20	.	.	.	.	.
		.	.	.	9-0	.	40		125	1100	.			.													.				*	68					.
MRS01	MED RECORDS, STOR, FIXED	VT	GPT	AT1	2700	900	35	40	7.5	300	.	.	.	.	.	.	.	.	.	.	.	.	.	.	.	.	.	0	4	1	*	20	.	.	.	.	.
		.	.	.	9-0	3-0	40		150	.	.			.													.				*	68					.
MRS02	MED RECORDS, STOR, MOVABLE	VT	GPT	AT1	2700	900	35	40	D	300	.	.	.	.	.	.	.	.	.	.	.	.	.	.	.	.	.	0	4	1	*	20	.	.	.	.	.
		CP	.	.	9-0	3-0	40		D	.	.			.													.				*	68					.

Room Code	Room Name	ARCHITECTURAL MATRL+FIN FL	WL	CLG	CLG HT	DOOR SIZE	NOISE RM	SC	STRUCTURAL FLR LOAD	ELECTRICAL LIGHT LEV	N	ES PWR PWR	LT	N	MEDICAL GASES MCA	DCA	LA	PA	MV	DHV	DLV	LDE	OX	NO	NI	WAGD	N	HVAC BL	AC	OA	TEMP SM	WN	RH	FL IN	F	EX	N
MRT01	MED RECORDS TRANSCRIPTION	VT	GPT	AT1	2400	900	25	40	3	700	.	.	.	.	.	.	.	.	.	.	.	.	.	.	.	.	.	0	4	1	*	20	.	.	.	.	.
		CP	.	.	8-0	3-0	30		60	.	.			.													.				*	68					.
MRWK1	MED RECORDS WORKROOM	VT	GPT	AT1	2400	900	30	40	5	700	.	.	.	.	.	.	.	.	.	.	.	.	.	.	.	.	.	0	4	1	*	20	.	.	.	.	.
		CP	.	.	8-0	3-0	35		100	.	.			.													.				*	68					.
NBCD1	NBC DECONTAMINATION SUITE	CS	SSP	SSP	.	VAR	35	50	5	500	C	R	L	.	1	.	.	1	1	.	.	.	1	.	.	.	B	-	6	2	*	20	.	14	.	Y	M
		.	.	.	.	VAR	40		100	.	.			.													.				*	68					.
NBCD2*	DECONTAMINATION SHOWER	SV	SSP	SSP	VAR	VAR	35	40	3	300	.	.	.	.	.	.	.	.	.	.	.	.	.	.	.	.	.	-	6	2	*	20	.	14	.	Y	M
		CS	GLG	GLG	VAR	VAR	40		60	.	.			.													.				*	68					.
NCWD1	NOURISHMENT CENTER, WARD	VT	GLG	AT1	2400	OPEN	35	40	5	500	.	.	.	U	.	.	.	.	.	.	.	.	.	.	.	.	.	0	6	2	*	20	.	14	.	.	.
		SV	GPT	.	8-0	OPEN	40		100	.	.			.													.				*	68					.
NMCR1	NUCLEAR MEDICINE, COMPUTER ROOM	VT	GPT	AT1	2400	900	30	40	5	500	.	.	LS	.	.	.	.	.	.	.	.	.	.	.	.	.	.	0	6	2	*	20	.	.	.	.	.
		CP	.	.	8-0	3-0	35		100	.	.			.													.				*	68					.
NMDC1	NUCLEAR MEDICINE, DOSE CALIBRATION	SV	GLG	AT1	2400	900	30	40	3	500	C	.	LS	.	1	.	.	.	1	.	.	.	1	.	.	.	.	-	6	2	*	20	.	14	.	Y	M
		.	.	.	8-0	3-0	35		60	1100	.			.													.				*	68					.
NMDS1	NUCLEAR MEDICINE, DECAY STORAGE	SV	GLG	AT1	2400	900	30	40	3	300	.	.	LS	E	.	.	.	.	.	.	.	.	.	.	.	.	.	-	6	2	*	20	.	14	.	Y	.
		.	.	.	8-0	3-0	35		60	.	.			.													.				*	68					.
NMGS1	NUCLEAR MEDICINE, GENERAL SCANNING	SV	GLG	AT1	3000	1200	30	40	5	500	A	.	LS	.	1	.	.	.	1	.	.	.	1	.	.	.	.	-	6	2	*	20	.	.	.	Y	.
		.	.	.	10-0	4-0	35		100	.	C			.													.				*	68					.
NMIR1	NUCLEAR MEDICINE, INJECTION ROOM	SV	GLG	AT1	2400	1050	30	40	3	700	A	.	LS	.	1	.	.	.	1	.	.	.	1	.	.	.	.	-	6	2	*	20	.	14	.	Y	.
		.	.	.	8-0	3-6	35		60	.	C			.													.				*	68					.
NMRC1	NUCLEAR MEDICINE, RADIUM CART HOLD	SV	GLG	AT1	2400	900	30	40	5	300	.	.	LS	E	.	.	.	.	.	.	.	.	.	.	.	.	.	0	4	1	*	20	.	.	.	.	.
		.	.	.	8-0	3-0	35		100	.	.			.													.				*	68					.
NMRP1	NUCLEAR MEDICINE, RADIOPHARMACY	SV	GLG	AT1	2400	900	30	40	5	500	A	.	LS	.	1	.	.	.	1	.	.	.	.	.	.	.	.	-	6	2	*	20	.	.	.	Y	M
		.	.	.	8-0	3-0	35		100	.	C			.													.				*	68					.
NMSS1	NUCLEAR MEDICINE, SPECIAL SCANNING	SV	GLG	AT1	2400	900	30	40	5	500	C	.	LS	E	1	.	.	.	1	.	.	.	1	.	.	.	.	0	6	2	*	20	.	14	.	.	.
		.	.	.	8-0	3-0	35		100	.	.			.													.				*	68					.

Room Code	Room Name	ARCHITECTURAL MATRL+FIN FL	WL	CLG	CLG HT	DOOR SIZE	NOISE RM	SC	STRUCTURAL FLR LOAD	ELECTRICAL LIGHT LEV	N	ES PWR PWR	LT	N	MEDICAL GASES MCA	DCA	LAA	PAA	MV	DHV	DLV	LDE	OX	NO	NI	WAGD	N	HVAC BL	AC	OA	TEMP SM	WN	RH	FL IN	F	EX	N
NMUR1	NUCLEAR MEDICINE, UPTAKE ROOM	SV	GLG	AT1	2400	900	30	40	5	200	.	.	LS	E	1	.	.	.	1	.	.	.	1	.	.	.	.	0	6	2	*	20	.	.	.	.	.
		.	.	.	8-0	3-0	35		100	.	.			.													.				*	68					.
NMWB1	NUCLEAR MEDICINE, WHOLE BODY	SV	GLG	AT1	3000	1200	30	40	5	500	C	.	LS	E	1	.	.	.	1	.	.	.	1	.	.	.	.	0	6	2	*	20	.	14	.	.	.
		.	.	.	10-0	4-0	35		100	.	.			.													.				*	68					.
NMWR1*	NUCLEAR MEDICINE, WAITING ROOM, HOT	VT	GPT	AT1	2400	1200	30	45	3	300	.	.	.	.	.	.	.	.	.	.	.	.	.	.	.	.	.	-	6	1	*	20	.	14	.	Y	.
		CP	.	.	8'-0"	4'-0"	40		60	.	.			.													.				*	68					.
NSTA1	NURSE STATION, INPATIENT/ER		GPT	AT1	2400	M	35	40	5	300	C	R	L	.	.	.	.	.	.	.	.	.	.	.	.	.	.	0	6	2	*	20	.	14	.	.	.
		VT	.	.	8-0	.	40		100	700	.			.													.				*	68					.
NSTA3	NURSE STATION, SUBSTATION		GPT	AT1	2400	M	35	40	5	300	C	R	L	.	.	.	.	.	.	.	.	.	.	.	.	.	.	0	6	2	*	20	.	14	.	.	.
		VT	.	.	8-0	.	40		100	700	.			.													.				*	68					.
NSTA4	NURSE STATION, OUTPATIENT	CP	GPT	AT1	2400	M	35	40	5	300	C	.	.	.	.	.	.	.	.	.	.	.	.	.	.	.	.	0	4	2	*	20	.	14	.	.	.
		VT	GPT	.	8-0	.	40		100	700	.			.													.				*	68					.
NYAR1	NURSERY ANTEROOM WITH SCRUB SINK	SV	GPT	AT1	2400	1200	25	45	3	300	.	.	.	.	.	.	.	.	.	.	.	.	.	.	.	.	.	+	12	3	23	27	Y	14	.	.	P
		VT	GLG	AT2	8'-0"	4-0	30		60	.	.			.													.				74	80					.
NYFA1	NURSERY FEEDING AREA	SV	GLG	AT2	2700	1200	25	45	3	500	A	.	LS	.	.	.	.	.	1	.	.	.	1	.	.	.	.	0	6	1.5	23	27	Y	14	.	.	P
		VT	GPT	.	9-0	4-0	30		60	.	C			.													.				74	80					.
NYIC1	NURSERY LEVEL II	SV	GLG	AT2	2700	F	25	45	3	700	A	R	L	.	2	.	.	.	2	.	.	.	2	.	.	.	G	++	12	5	23	27	Y	14	.	.	P
		VT	GPT	.	9-0	.	30		60	.	C			.													.				74	80					.
NYIC2	NURSERY LEVEL III (NICU)	SV	GLG	AT2	2700	1200	25	45	3	700	A	RC	L	.	3	.	.	.	3	.	.	.	3	.	.	.	G	++	12	5	23	27	Y	14	.	.	P
		VT	.	.	9-0	4-0	30		60	.	C			.													.				74	80					O
NYIR1	NURSERY, ISOLATION	SV	GLG	AT2	2700	1200	25	45	3	700	A	R	L	.	3	.	.	.	3	.	.	.	3	.	.	.	.	–	12	2	23	27	Y	14	.	Y	P
		VT	.	.	9-0	4-0	30		60	.	C			.													.				74	80					A
NYNN1	NURSERY, NORMAL NEWBORN, LEVEL I	SV	GLG	AT2	2700	1200	25	45	3	700	A	R	L	.	1	.	.	.	1	.	.	.	1	.	.	.	H	++	12	5	23	27	Y	14	.	.	P
		VT	.	.	9-0	4-0	30		60	.	C			.													.				74	80					.
NYPR1	NURSERY PROCEDURE ROOM	SV	GLG	AT2	2700	1200	25	45	3	500	C	R	L	.	.	.	.	.	1	.	.	.	1	.	.	.	G	++	12	5	23	27	Y	14	14	.	P
		.	.	.	9-0	4-0	30		60	1100	.			.													.				74	80					.

Room Code	Room Name	ARCHITECTURAL MATRL+FIN FL	WL	CLG	CLG HT	DOOR SIZE	NOISE RM	SC	STRUCTURAL FLR LOAD	ELECTRICAL LIGHT LEV	N	ES PWR PWR	LT	N	MEDICAL GASES MCA	DCA	LA	PA	MV	DHV	DLV	LDE	OX	NO	NI	WAGD	N	HVAC BL	AC	OA	TEMP SM	WN	RH	FL IN	F	EX	N
NYPT1	NURSERY TEACHING PARENTS ROOM	CP	GPT	AT1	2400	1200	30	45	3	700	A	.	.	.	.	.	.	.	.	.	.	.	.	.	.	.	.	0	6	2	23	27	Y	.	.	.	P
		VT	.	.	8-0	4'-0"	35		60	.	C			.													.				74	80					.
NYTU1	NURSERY TRANSPORT UNIT ALCOVE	SV	GLG	AT2	2400	OPEN	30	45	3	500	C	R	L	.	.	.	.	.	.	.	.	.	.	.	.	.	.	0	4	1	*	20	.	14	.	.	.
		VT	GPT	.	8-0	OPEN	35		60	.	.			.													.				*	68					.
NYWE1	NURSERY, EXAM AREA	SV	GLG	AT1	2700	1200	30	45	3	500	C	R	L	.	.	.	.	.	1	.	.	.	1	.	.	.	G	++	12	5	23	27	Y	14	.	.	P
		VT	GPT	.	9-0	4-0	35		60	1100	.			.													.				74	80					.
OFA01	OFFICE, ADMINISTRATIVE, STD FURN.	CP	GPT	AT1	2400	900	30	40	3	300	.	.	.	.	.	.	.	.	.	.	.	.	.	.	.	.	.	0	4	1	*	20	.	.	.	.	.
		VT	.	.	8-0	3-0	35		60	500	.			.													.				*	68					.
OFA02	OFFICE, ADMINISTRATIVE, SYS FURN.	CP	GPT	AT1	2400	900	30	40	3	300	.	.	.	.	.	.	.	.	.	.	.	.	.	.	.	.	.	0	4	1	*	20	.	.	.	.	.
		VT	.	.	8-0	3-0	35		60	500	.			.													.				*	68					.
OFA03*	OFFICE, ADMINISTRATIVE CUBICLES	CP	GPT	AT1	2400	900	30	40	3	300	.	.	.	.	.	.	.	.	.	.	.	.	.	.	.	.	.	0	4	1	*	20	.	.	.	.	.
		VT	.	.	8'-0"	3'-0"	35		60	500	.			.													.				*	68					.
OFC01	OFFICE, COMMANDER, SMALL FACILITY	CP	GPT	AT1	2400	900	30	40	3	300	.	.	.	.	.	.	.	.	.	.	.	.	.	.	.	.	.	0	4	1	*	20	.	.	.	.	.
		VT	.	.	8-0	3-0	35		60	500	.			.													.				*	68					.
OFC02	OFFICE, COMMANDER, MEDIUM FACILITY	CP	GPT	AT1	2400	900	30	40	3	300	.	.	.	.	.	.	.	.	.	.	.	.	.	.	.	.	.	0	4	1	*	20	.	.	.	.	.
		VT	.	.	8-0	3-0	35		60	500	.			.													.				*	68					.
OFC03	OFFICE, COMMANDER, LARGE FACILITY	CP	GPT	AT1	2600	900	30	45	3	300	.	.	.	.	.	.	.	.	.	.	.	.	.	.	.	.	.	0	4	1	*	20	.	.	.	.	.
		VT	.	.	8-6	3-0	35		60	500	.			.													.				*	68					.
OFD01	OFFICE, PROVIDER, ARMY	VT	GPT	AT1	2400	900	30	40	3	300	.	.	.	.	.	.	.	.	.	.	.	.	.	.	.	.	.	0	4	1	*	20	.	14	.	.	.
		.	.	.	8-0	3-0	35		60	500	.			.													.				*	68					.
OFD02	OFFICE, PROVIDER, NAVY	VT	GPT	AT1	2400	900	30	40	3	300	.	.	.	.	.	.	.	.	.	.	.	.	.	.	.	.	.	0	4	1	*	20	.	14	.	.	.
		.	.	.	8-0	3-0	35		60	500	.			.													.				*	68					.
OFD03	OFFICE, PROVIDER, AIR FORCE	VT	GPT	AT1	2400	900	30	40	3	300	.	.	.	.	.	.	.	.	.	.	.	.	.	.	.	.	.	0	4	1	*	20	.	14	.	.	.
		.	.	.	8-0	3-0	35		60	500	.			.													.				*	68					.
OFDC1*	OFFICE, MENTAL HEALTH PROVIDER	CP	GPT	AT1	2400	900	30	40	3	300	.	.	.	.	.	.	.	.	.	.	.	.	.	.	.	.	.	0	4	1	*	20	.	14	.	.	.
		VT	.	.	8'-0"	3'-0"	35		60	500	.			.													.				*	68					.

Room Code	Room Name	ARCHITECTURAL MATRL+FIN FL	WL	CLG	CLG HT	DOOR SIZE	NOISE RM	SC	STRUCTURAL FLR LOAD	ELECTRICAL LIGHT LEV	N	ES PWR PWR	LT	N	MEDICAL GASES MCA	DCA	LA	PA	MV	DHV	DLV	LDE	OX	NO	NI	WAGD	N	HVAC BL	AC	OA	TEMP SM	WN	RH	FL IN	F	EX	N
OFDC2*	OFFICE, CONSULT ROOM	CP	GPT	AT1	2400	900	30	40	3	300	.	.	.	.	.	.	.	.	.	.	.	.	.	.	.	.	.	0	4	1	*	20	.	14	.	.	.
		VT	.	.	8'-0"	3'-0"	35		60	500	.			.													.				*	68					.
OFDR1	OFFICE, DOCTOR, RADIOLOGY	CP	GPT	AT1	2400	900	30	40	3	300	.	.	.	.	.	.	.	.	.	.	.	.	.	.	.	.	.	0	4	1	*	20	.	.	.	.	.
		VT	.	.	8-0	3-0	35		60	500	.			.													.				*	68					.
OFM01	OFFICE, KEY PERSONNEL, SMALL	CP	GPT	AT1	2400	900	30	40	3	300	.	.	.	.	.	.	.	.	.	.	.	.	.	.	.	.	.	0	4	1	*	20	.	.	.	.	.
		VT	.	.	8-0	3-0	35		60	500	.			.													.				*	68					.
OFM02	OFFICE, KEY PERSONNEL, MEDIUM	CP	GPT	AT1	2400	900	30	40	3	300	.	.	.	.	.	.	.	.	.	.	.	.	.	.	.	.	.	0	4	1	*	20	.	.	.	.	.
		VT	.	.	8-0	3-0	35		60	500	.			.													.				*	68					.
OFM03*	OFFICE, KEY PERSONNEL, LARGE	CP	GPT	AT1	2400	900	30	40	3	300	.	.	.	.	.	.	.	.	.	.	.	.	.	.	.	.	.	0	4	1	*	20	.	.	.	.	.
		VT	.	.	8'-0"	3'-0"	35		60	500	.			.													.				*	68					.
OOHR1*	OUTPATIENT OBSERVATION/HYDRATION	VT	GPT	AT1	2400	900	30	40	3	.	.	.	.	.	.	.	.	.	.	.	.	.	.	.	.	.	.	0	4	2	*	20	.	14	.	.	.
		.	.	.	8'-0"	3'-0"	35		60	.	.			.													.				*	68					.
OPAE1*	AUDITORY ELECTROPHYSIOLOGICAL LAB	VT	GPT	AT1	2400	900	30	40	3	300	.	.	.	.	.	.	.	.	.	.	.	.	.	.	.	.	.	0	4	2	*	20	.	14	.	.	.
		CP	.	.	8'-0"	3'-0"	35		60	.	.			.													.				*	68					.
OPAI1	OUTPATIENT ALLERGY INJECTION ROOM	VT	GPT	AT1	2400	900	30	40	3	500	C	.	.	.	.	.	.	.	1	.	.	.	1	.	.	.	B	0	4	2	*	20	.	14	.	.	.
		SV	GLG	.	8-0	3-0	35		60	1100	.			.													.				*	68					.
OPAS1	OUTPATIENT ALLERGY SKIN TESTING	VT	GPT	AT1	2400	900	30	40	3	500	C	.	.	.	.	.	.	.	1	.	.	.	1	.	.	.	B	0	4	2	*	20	.	14	.	.	.
		SV	GLG	.	8-0	3-0	35		60	1100	.			.													.				*	68					.
OPCR1	OUTPATIENT, CASTROOM, 1 STATION	VT	GPT	AT1	2700	G	35	50	3	500	C	.	.	.	1	.	.	.	1	.	.	.	1	.	.	.	B	0	10	2	*	21	.	14	.	Y	.
		SV	GLG	GPT	9-0	.	40		60	.	.			.													.				*	70					.
OPCR2*	OUTPATIENT, CAST ROOM, 2 STATION	VT	GPT	AT1	2700	1200	30	50	3	500	C	.	.	.	1	.	.	.	1	.	.	.	1	.	.	.	.	0	10	2	*	21	.	14	.	Y	.
		SV	GLG	GPT	9'-0"	4'-0"	40		60	.	.			.													.				*	70					.
OPCT1	OUTPATIENT CHEMOTHERAPY AREA	SV	GLG	AT1	2400	900	30	40	3	500	C	.	.	.	.	.	.	.	1	.	.	.	1	.	.	.	B	0	4	2	*	20	.	14	.	.	.
		VT	.	AT2	8'-0"	3-0	35		60	.	.			.													.				*	68					.
OPCT2	OUTPATIENT CHEMOTHERAPY PREPARATION ROOM	SV	GLG	AT1	2400	900	30	40	3	500	C	.	.	.	.	.	.	.	.	.	.	.	.	.	.	.	.	0	6	2	*	20	.	14	.	.	.
		VT	.	AT2	8-0	3-0	35		60	.	.			.													.				*	68					.

APPENDIX A

ARCHITECTURAL AND ENGINEERING DESIGN REQUIREMENTS

Room Code	Room Name	ARCHITECTURAL MATRL+FIN FL	WL	CLG	CLG HT	DOOR SIZE	NOISE RM	SC	STRUCTURAL FLR LOAD	ELECTRICAL LIGHT LEV	N	ES PWR PWR	LT	N	MEDICAL GASES MCA	DCA	LA	PA	MV	DHV	DLV	LDE	OX	NO	NI	WAGD	N	HVAC BL	AC	OA	TEMP SM	WN	RH	FL IN	F	EX	N
OPDC1*	OUTPATIENT DERMATOLOGY CRYOTHERAPY	VT	GPT	AT1	2400	900	30	40	3	500	C	.	.	.	.	.	.	.	.	.	.	.	.	.	.	.	.	0	4	2	*	20	.	14	.	.	.
		SV	GLG	.	8'-0"	3'-0"	35		60	1100	.			.													.				*	68					.
OPDU1	OUTPATIENT DERMATOLOGY UV BOOTH	VT	GPT	AT1	2400	900	30	40	3	500	A	.	.	.	.	.	.	.	.	.	.	.	.	.	.	.	.	0	4	2	*	20	.	14	.	.	.
		.	.	.	8-0	3-0	35		60	.	C			.													.				*	68					.
OPEC1	OUTPATIENT EKG TESTING	VT	GPT	AT1	2400	900	30	40	3	300	C	.	.	.	.	.	.	.	1	.	.	.	1	.	.	.	.	0	4	2	*	21	.	14	.	.	.
		.	.	.	8-0	3-0	35		60	.	.			.													.				*	70					.
OPEC2	OUTPATIENT EKG WORK AREA 1 STATION	VT	GPT	AT1	2400	900	30	40	3	500	C	.	.	.	.	.	.	.	.	.	.	.	.	.	.	.	.	0	4	2	*	20	.	14	.	.	.
		.	.	.	8-0	3-0	35		60	.	.			.													.				*	68					.
OPEE1	OUTPATIENT EEG TESTING AREA,1 STA.	VT	GPT	AT1	2400	900	30	40	3	300	A	.	.	.	.	.	.	.	1	.	.	.	1	.	.	.	.	0	4	2	*	20	.	14	.	.	.
		.	.	.	8-0	3-0	35		60	.	C			.													.				*	68					.
OPEE2	OUTPATIENT EEG WORK AREA, 1 STATION	VT	GPT	AT1	2400	900	25	40	3	1100	C	.	.	.	.	.	.	.	.	.	.	.	.	.	.	.	.	0	4	2	*	20	.	14	.	.	.
		.	.	.	8-0	3-0	30		60	.	.			.													.				*	68					.
OPHM1	OUTPATIENT HOLTER MONITOR ROOM	VT	GPT	AT1	2400	900	30	40	3	500	C	.	.	.	.	.	.	.	.	.	.	.	.	.	.	.	.	0	4	1	*	20	.	14	.	.	.
		.	.	.	8-0	3-0	35		60	.	.			.													.				*	68					.
OPIR1	OUTPATIENT IMMUNIZATION ROOM	VT	GPT	AT1	2400	1050	35	40	3	500	C	.	.	U	.	.	.	.	1	.	.	.	1	.	.	.	B	0	4	1	*	20	.	14	.	.	.
		SV	GLG	.	8'-0"	3-6	40		60	.	.			.													.				*	68					.
OPMH1*	OUTPATIENT, GROUP THERAPY	CP	GPT	AT1	VAR	900	30	40	3	500	.	.	.	.	.	.	.	.	.	.	.	.	.	.	.	.	.	0	6	2	*	20	.	.	.	.	.
		VT	GAF	.	VAR	3'-0"	35		60	.	.			.													.				*	68					.
OPMH2*	OUTPATIENT, MENTAL HEALTH TESTING	CP	GPT	AT1	2400	900	30	40	3	500	.	.	.	.	.	.	.	.	.	.	.	.	.	.	.	.	.	0	4	2	*	20	.	14	.	.	.
		VT	GAF	.	8'-0"	3'-0"	35		60	.	.			.													.				*	68					.
OPMH3*	OUTPATIENT, BIOFEEDBACK ROOM	CP	GPT	AT1	2400	900	30	40	3	700	A	.	.	.	.	.	.	.	.	.	.	.	.	.	.	.	.	0	4	2	*	20	.	14	.	.	.
		VT	GAF	.	8'-0"	3'-0"	35		60	.	C			.													.				*	68					.
OPMH4*	OUTPATIENT, SECURED OBSERVATION ROOM	CP	GPT	AT1	2400	900	30	40	3	500	A	.	LS	.	.	.	.	.	.	.	.	.	.	.	.	.	.	0	4	2	*	20	.	14	.	.	.
		VT	GAF	.	8'-0"	3'-0"	35		60	.	.			.													.				*	68					.
OPNR1	OUTPATIENT NEPHROLOGY RENAL STUDY	SV	GLG	AT2	2400	900	30	40	3	500	C	.	.	.	1	.	.	.	1	.	.	.	1	.	.	.	.	+	6	1	*	21	.	14	.	.	.
		VT	GPT	AT1	8'-0"	3-0	35		60	1100	.			.													.				*	70					.

Room Code	Room Name	ARCHITECTURAL MATRL+FIN FL	WL	CLG	CLG HT	DOOR SIZE	NOISE RM	SC	STRUCTURAL FLR LOAD	ELECTRICAL LIGHT LEV	N	ES PWR PWR	LT	N	MEDICAL GASES MCA	DCA	LA	PA	MV	DHV	DLV	LDE	OX	NO	NI	WAGD	N	HVAC BL	AC	OA	TEMP SM	WN	RH	FL IN	F	EX	N
OPPE1	OUTPATIENT, ECHOCARDIOGRAPH	VT	GPT	AT1	2400	1050	30	40	3	500	C	.	.	.	.	.	.	.	1	.	.	.	1	.	.	.	.	0	4	1	*	21	.	14	.	.	.
		VT	GPT	.	8-0	3-6	35		60	.	.			.													.				*	70					.
OPPE2*	OUTPATIENT STRESS ECHOCARDIOGRAPH	VT	GPT	AT1	2400	1050	30	40	3	500	C	.	.	.	.	.	.	.	1	.	.	.	1	.	.	.	.	0	4	2	*	21	.	14	.	.	.
		CP	GAF	.	8'-0"	3'-6"	35		60	.	.			.													.				*	70					.
OPPF1	OUTPATIENT PULMONARY FUNCTION	VT	GPT	AT1	2700	1050	30	40	3	500	C	.	.	.	1	.	.	.	1	.	.	.	1	.	.	.	B	-	6	1.5	*	21	.	14	.	Y	.
		.	.	.	9-0	3'-6"	35		60	.	.			.													M				*	70					.
OPPF4	OUTPATIENT PULMO FUNCT BODY BOX	VT	GPT	AT1	2700	1050	35	50	3	500	C	.	.	.	1	.	.	.	1	.	.	.	1	.	.	.	B	0	4	2	*	21	.	14	.	.	.
		.	.	.	9-0	3'-6"	40		60	.	.			.													M				*	70					.
OPPF5	OUTPATIENT PULMO FUNCT TREADMILL RM	VT	GPT	AT1	2700	1050	35	50	3	500	C	.	.	.	1	.	.	.	1	.	.	.	1	.	.	.	.	0	6	2	*	21	.	14	.	.	.
		.	.	.	9-0	3'-6"	40		60	.	.			.													.				*	70					.
OPPF6	OUTPATIENT PULMO FUNCT SLEEP STUDY	CP	GPT	AT1	2600	1050	20	50	3	100	A	.	.	.	.	.	.	.	.	.	.	.	.	.	.	.	.	0	4	2	*	21	.	14	.	.	.
		.	.	.	8-6	3'-6"	25		60	.	.			.													.				*	70					.
OPPM1	OUTPATIENT PACEMAKER WORKROOM	VT	GPT	AT1	2400	900	30	40	3	1100	C	.	.	.	.	.	.	.	.	.	.	.	.	.	.	.	.	0	4	2	*	21	.	14	.	.	.
		.	.	.	8-0	3-0	35		60	.	.			.													.				*	70					.
OPPS1	OUTPATIENT PULMO FUNCT SCREENING	VT	GPT	AT1	2400	900	30	40	3	500	C	.	.	.	1	.	.	.	1	.	.	.	1	.	.	.	B	0	4	2	*	21	.	14	.	.	.
		.	.	.	8-0	3-0	35		60	.	.			.													.				*	70					.
OPRC1	OUTPATIENT RESPIRATORY CLEANING RM	VT	GLG	AT1	2400	900	30	40	3	1100	.	.	.	.	1	.	.	.	1	.	.	.	1	.	.	.	B	-	6	2	*	20	.	14	.	Y	M
		SV	GPT	.	8-0	3-0	35		60	.	.			.													.				*	68					.
OPRT1	OUTPATIENT RESPIRATORY TREATMENT	VT	GLG	AT1	2400	900	30	40	3	500	C	.	.	.	1	.	.	.	1	.	.	.	1	.	.	.	B	0	6	2	*	21	.	14	.	.	.
		SV	GPT	.	8-0	3-0	35		60	.	.			.													.				*	70					.
OPST1	OUTPATIENT NON-STRESS TESTING, MULTIPLE	VT	GPT	AT1	2700	900	35	50	3	500	C	.	.	.	1	.	.	.	1	.	.	.	1	.	.	.	B	0	4	2	*	21	.	14	.	.	.
		.	.	.	9-0	3-0	40		60	.	.			.													.				*	70					.
OPTM1	OUTPATIENT TREADMILL ROOM	VT	GPT	AT1	2700	1050	35	50	3	500	C	.	.	.	1	.	.	.	1	.	.	.	1	.	.	.	B	0	4	2	*	21	.	14	.	.	.
		.	.	.	9-0	3'-6"	40		60	.	.			.													.				*	70					.
OPTM2*	OUTPATIENT TILT TABLE TESTING	VT	GPT	AT1	2700	1050	35	50	3	500	C	.	.	.	.	.	.	.	.	.	.	.	.	.	.	.	.	.	.	.	*	.	.	14	.	.	.
		.	.	.	9'-0"	3'-6"	40		60	.	.			.													.				*	.					.

Room Code	Room Name	ARCHITECTURAL MATRL+FIN FL	WL	CLG	CLG HT	DOOR SIZE	NOISE RM	SC	STRUCTURAL FLR LOAD	ELECTRICAL LIGHT LEV	N	ES PWR PWR	LT	N	MEDICAL GASES MCA	DCA	LA	PA	MV	DHV	DLV	LDE	OX	NO	NI	WAGD	N	HVAC BL	AC	OA	TEMP SM	WN	RH	FL IN	F	EX	N
OPVL1	OUTPATIENT VASCULAR LAB	SV	GLG	AT1	2400	1050	30	40	3	500	C	.	.	.	1	.	.	.	1	.	.	.	1	.	.	.	B	0	4	2	*	21	.	14	.	.	.
		VT	GPT	.	8-0	3-6	35		60	1100	.			.													.				*	70					.
ORCM1	OPERATING ROOM, CARDIAC STORAGE	VT	GPT	AT1	2700	900	35	50	3	2100	D	RA	LB	.	.	.	.	.	.	.	.	.	.	.	.	.	.	0	6	2	24	20	.	14	.	.	.
		CS	GLG	.	9'-0"	3'-0"	40		60	.	F			.													.				75	70					.
ORCS1	OPERATING ROOM CYSTOSCOPIC SURGERY	ET	GLG	GLG	3000	K	30	45	3	2100	D	RA	LB	.	6	.	.	.	12	.	.	.	8	2	4	2	C	++	25	5	R	R	Y	14	14	Y	C
		SV	SSP	.	10-0	.	35		60	.	F			.													D				R	R					.
ORCT1	OPERATING ROOM CARDIOTHORACIC	ET	GLG	GLG	3000	K	30	45	3	2100	D	RA	LB	.	6	.	.	.	12	.	.	.	8	2	4	2	C	++	25	5	R	R	Y	14	17	Y	C
		SV	SSP	.	10-0	.	35		60	.	F			.													D				R	R					.
ORCW1	OPERATING ROOM CLEAN WORK AREA	ET	GLG	GLG	2700	1050	30	45	3	1100	F	R	L	.	.	.	.	.	.	.	.	.	.	.	.	.	.	+	6	2	20	20	.	14	.	.	.
		SV	SSP	.	9-0	3-6	35		60	.	.			.													.				68	68					.
ORDA1	OPERATING ROOM DECONTAMINATION AR.	CT	GLG	GLG	2700	1050	30	45	3	300	.	R	L	.	1	.	.	.	1	.	.	.	1	.	1	.	I	-	10	2	*	20	.	14	.	Y	M
		SV	SSP	.	9-0	3-6	35		60	.	.			.													.				*	68					.
OREC1	OPERATING ROOM EQUIPMENT CLEANUP	VT	GLG	GLG	2700	900	30	45	3	300	.	R	L	.	1	.	.	.	1	.	.	.	1	.	1	.	I	+	6	2	24	20	.	14	.	Y	.
		SV	SSP	.	9-0	3-0	35		60	.	.			.													.				75	68					.
ORGS1	OPERATING ROOM GENERAL SURGERY	ET	GLG	GLG	3000	K	30	45	3	2100	D	RA	LB	.	6	.	.	.	12	.	.	.	8	2	4	2	C	++	25	5	R	R	Y	14	14	.	C
		SV	SSP	.	10-0	.	35		60	.	F			.													D				R	R					.
ORHL1	OPERATING ROOM HEART LUNG PUMP ROOM	ET	GLG	GLG	3000	K	.	.	3	200	.	.	LS	.	.	.	.	.	.	.	.	.	.	.	.	.	.	++	25	5	R	R	Y	14	17	.	C
		SV	SSP	.	10-0	.	.		60	.	.			.													.				R	R					.
ORNE1	OPERATING ROOM NEUROSURG EQUIP STOR	SV	GLG	GLG	3000	1200	.	.	6	200	.	.	LS	.	.	.	.	.	.	.	.	.	.	.	.	.	.	+	6	1.5	24	24	.	14	.	.	.
		.	SSP	.	10-0	4-0	.		125	.	.			.													.				75	75					.
ORNS1	OPERATING ROOM NEUROSURGERY	ET	GCT	GLG	3000	K	30	45	3	2100	D	RA	LB	.	6	.	.	.	12	.	.	.	8	2	4	2	C	++	25	5	R	R	Y	14	17	.	C
		SV	SSP	.	10-0	.	35		60	.	F			.													D				R	R					.
OROE1	OPERATING ROOM ORTHOPEDIC EQUIP SR	SV	GLG	GLG	3000	1200	40	40	6	200	.	.	LS	.	.	.	.	.	.	.	.	.	.	.	.	.	.	+	6	1.5	24	20	.	14	.	.	.
		.	SSP	.	10-0	4-0	45		125	.	.			.													.				75	68					.
OROS1	OPERATING ROOM ORTHOPEDIC SURGERY	ET	GLG	GLG	3000	K	30	45	3	2100	D	RA	LB	.	6	.	.	.	12	.	.	.	8	2	4	2	C	++	25	5	R	R	Y	14	17	.	C
		SV	SSP	.	10-0	.	35		60	.	F			.													D				R	R					.

Room Code	Room Name	ARCHITECTURAL MATRL+FIN FL	WL	CLG	CLG HT	DOOR SIZE	NOISE RM	SC	STRUCTURAL FLR LOAD	ELECTRICAL LIGHT LEV	N	ES PWR PWR	LT	N	MEDICAL GASES MCA	DCA	LA	PA	MV	DHV	DLV	LDE	OX	NO	NI	WAGD	N	HVAC BL	AC	OA	TEMP SM	WN	RH	FL IN	F	EX	N
ORPC1	OPERATING ROOM PLASTER CART STORAGE	SV	GLG	GLG	2700	1050	30	40	3	50	.	.	LB	.	.	.	.	.	.	.	.	.	.	.	.	.	.	0	4	1	24	20	.	14	.	.	.
		.	SSP	.	9-0	3-6	35		60	.	.			.													.				75	68					.
ORPH2	OPERATING ROOM PREP/HOLD WORKSTATIO	VT	GLG	GLG	2700	1200	30	40	3	500	C	R	L	.	1	.	.	.	1	.	.	.	1	.	.	.	B	0	6	2	24	24	.	14	.	.	.
		SV	SSP	.	9-0	4-0	35		60	1100	.			.													.				75	75					.
ORPP1	OPERATING ROOM PATIENT PREP/INDUCT	VT	GLG	GLG	2700	1200	30	40	3	500	C	R	L	.	1	.	.	.	1	.	.	.	1	.	.	.	B	0	6	2	24	24	.	14	.	.	.
		SV	SSP	.	9-0	4-0	35		60	1100	.			.													.				75	75					.
ORSA1	OPERATING ROOM SCRUB AREA, 2 SINK	SV	GLG	GLG	2700	OPEN	30	40	3	1100	A	.	L	.	.	.	.	.	.	.	.	.	.	.	.	.	.	+	6	2	24	24	.	14	.	.	.
		SSP	SSP	.	9-0	OPEN	35		60	.	C			.													.				75	75					.
ORSR1	OPERATING ROOM SUBSTERILE ROOM	ET	GLG	GLG	2700	900	30	40	3	500	.	.	L	.	.	.	.	.	.	.	.	.	.	.	.	.	.	+	6	2	24	24	.	14	.	.	.
		SV	SSP	.	9-0	3-0	35		60	.	.			.													.				75	75					.
ORSS1	OPERATING ROOM STERILE STORAGE	VT	GLG	GLG	2700	900	40	40	6	200	.	.	LS	.	.	.	.	.	.	.	.	.	.	.	.	.	.	+	6	2	24	24	.	14	.	.	.
		SV	SSP	.	9-0	3-0	45		125	.	.			.													.				75	75					.
OTDL1	OCC. THERAPY, DAILY LIVING SKILLS TRAINING ROOM	CP	GPT	AT1	2400	1050	35	45	3	500	C	.	.	.	.	.	.	.	.	.	.	.	.	.	.	.	.	0	4	2	*	20	.	.	.	.	.
		VT	.	.	8'-0"	3-6	40		60	.	.			.													.				*	68					.
OTEV1	OCC. THERAPY, EVALUATION AREA	CP	GPT	AT1	2400	1050	30	45	3	500	C	.	.	.	.	.	.	.	.	.	.	.	.	.	.	.	.	0	4	2	*	20	.	.	.	.	.
		VT	.	.	8'-0"	3-6	35		60	.	.			.													.				*	68					.
OTGC1	OCC. THERAPY, GENERAL CLINIC AREA	CP	GPT	AT1	2700	900	30	45	3	500	C	.	.	.	.	.	.	.	.	.	.	.	.	.	.	.	.	0	4	1	*	20	.	.	.	.	.
		VT	.	.	9-0	3-0	35		60	.	.			.													.				*	68					.
OTWT1	OCC. THERAPY, ERGONOMICS LABORATORY	CP	GPT	AT1	2400	900	30	45	3	500	C	.	.	.	.	.	.	.	.	.	.	.	.	.	.	.	.	0	6	2	*	20	.	.	.	.	.
		VT	.	.	8'-0"	3-0	35		60	.	.			.													.				*	68					.
PAIA1	PATIENT ADMIN INTERVIEW AREA	CP	GPT	AT1	2400	900	30	40	3	500	.	.	.	.	.	.	.	.	.	.	.	.	.	.	.	.	.	0	4	1	*	20	.	.	.	.	.
		VT	.	.	8-0	3-0	35		60	.	.			.													.				*	68					.
PEDS1*	PHYSICAL EXAM, DENTAL SCREEN	VT	GPT	AT1	2400	900	30	45	3	1600	D	.	.	.	.	.	.	.	.	.	.	.	.	.	.	.	.	0	4	1	*	20	.	.	.	.	.
		SV	.	.	8'-0"	3'-0"	35		60	.	F			.													.				*	68					.
PEHS1	PHYSICAL EVAL HEARING SCREEN 1 PERSON	CP	GAF	AT1	2700	900	30	45	3	500	C	.	.	.	.	.	.	.	.	.	.	.	.	.	.	.	.	0	4	1	*	20	.	.	.	.	.
		VT	GPT	.	9-0	3-0	35		60	.	.			.													.				*	68					.

APPENDIX A

ARCHITECTURAL AND ENGINEERING DESIGN REQUIREMENTS

Room Code	Room Name	ARCHITECTURAL MATRL+FIN FL	WL	CLG	CLG HT	DOOR SIZE	NOISE RM	SC	STRUCTURAL FLR LOAD	ELECTRICAL LIGHT LEV	N	ES PWR PWR	LT	N	MEDICAL GASES MCA	DCA	LA	PA	MV	DHV	DLV	LDE	OX	ON	NI	WAGD	N	HVAC BL	AC	OA	TEMP SM	WN	RH	FL IN	F	EX	N
PEHS2	PHYSICAL EVAL HEARING SCREEN 4 PERSON	CP	GAF	AT1	2700	900	30	45	3	500	C	.	.	.	.	.	.	.	.	.	.	.	.	.	.	.	.	0	4	1	*	20	.	.	.	.	.
		VT	GPT	.	9-0	3-0	35		60	.	.			.													.				*	68					.
PEHS3	PHYSICAL EVAL HEARING SCREEN 6 PERSON	CP	GAF	AT1	2700	900	30	45	3	500	C	.	.	.	.	.	.	.	.	.	.	.	.	.	.	.	.	0	4	1	*	20	.	.	.	.	.
		VT	GPT	.	9-0	3-0	35		60	.	.			.													.				*	68					.
PEHS4	PHYSICAL EVAL HEARING SUITE(2 ROOM)	CP	GAF	AT1	2700	900	30	45	3	500	C	.	.	.	.	.	.	.	.	.	.	.	.	.	.	.	.	0	4	1	*	20	.	.	.	.	.
		VT	GPT	.	9-0	3-0	35		60	.	.			.													.				*	68					.
PEHW1	PHYSICAL EVAL HEIGHT AND WEIGHT	VT	GPT	AT1	2400	900	35	40	3	500	C	.	.	.	.	.	.	.	.	.	.	.	.	.	.	.	.	0	4	1	*	20	.	.	.	.	.
		.	.	.	8-0	3-0	40		60	.	.			.													.				*	68					.
PEVH2	PHYSICAL EVAL VISION/HEARING PEDS	VT	GPT	AT1	2400	900	30	40	3	500	C	.	.	.	.	.	.	.	.	.	.	.	.	.	.	.	.	0	4	1	*	20	.	.	.	.	.
		.	.	.	8-0	3-0	35		60	.	.			.													.				*	68					.
PEVS1	PHYSICAL EVAL VISION SCREENING	VT	GPT	AT1	2400	900	30	40	3	500	C	.	.	.	.	.	.	.	.	.	.	.	.	.	.	.	.	0	4	1	*	20	.	.	.	.	.
		.	.	.	8-0	3-0	35		60	.	.			.													.				*	68					.
PHBS1*	PHARMACY BULK STORAGE LOW VOLUME	VT	GPT	AT1	VAR	900	35	45	5	500	.	.	.	U	.	.	.	.	.	.	.	.	.	.	.	.	.	+	4	2	*	20	.	.	.	.	.
		.	.	.	VAR	3'-0"	40		100	.	.			.													.				*	68					.
PHBS2*	PHARMACY BULK STORAGE MEDIUM VOLUME	VT	GPT	AT1	VAR	900	35	45	5	500	.	.	.	U	.	.	.	.	.	.	.	.	.	.	.	.	.	+	4	2	*	20	.	.	.	.	.
		.	.	.	VAR	3'-0"	40		100	.	.			.													.				*	68					.
PHBS3*	PHARMACY BULK STORAGE HIGH VOLUME	VT	GPT	AT1	VAR	1066	35	45	5	500	.	.	.	U	.	.	.	.	.	.	.	.	.	.	.	.	.	+	4	2	*	20	.	.	.	.	.
		.	.	.	VAR	3'-6"	40		100	.	.			.													.				*	68					.
PHDS1*	PHARMACY OFF SITE SATELLITE FOR MEDIUM VOLUME	VT	GPT	AT1	VAR	900	30	40	3	1100	F	R	.	.	.	.	.	.	.	.	.	.	.	.	.	.	.	+	4	2	*	20	.	.	.	.	.
		.	.	.	VAR	3'-0"	35		60	.	.			.													.				*	68					.
PHDS2*	PHARMACY OFF SITE SATELLITE FOR HIGH VOLUME	VT	GPT	AT1	VAR	900	30	40	3	1100	F	R	.	.	.	.	.	.	.	.	.	.	.	.	.	.	.	+	4	2	*	20	.	.	.	.	.
		.	.	.	VAR	3'-0"	35		60	.	.			.													.				*	68					.
PHIV1	PHARMACY IV ADMIXTURE, LOW VOLUME	VT	GLG	AT2	2700	900	35	40	3	1100	F	R	L	.	.	.	.	.	.	.	.	.	.	.	.	.	.	+	4	2	*	20	.	.	.	.	.
		SV	GPT	AT1	9-0	3-0	40		60	.	.			.													.				*	68					.
PHIV2	PHARMACY IV ADMIXTURE, MED VOLUME	VT	GLG	AT2	2700	900	35	40	3	1100	F	R	L	.	.	.	.	.	.	.	.	.	.	.	.	.	.	+	4	2	*	20	.	.	.	.	.
		SV	GPT	AT1	9-0	3-0	40		60	.	.			.													.				*	68					.

Room Code	Room Name	ARCHITECTURAL MATRL+FIN FL	WL	CLG	CLG HT	DOOR SIZE	NOISE RM	SC	STRUCTURAL FLR LOAD	ELECTRICAL LIGHT LEV	N	ES PWR PWR	LT	N	MEDICAL GASES MCA	DCA	LAA	PAA	MV	DHV	DLV	LDE	OX	NO	NI	WAGD	N	HVAC BL	AC	OA	TEMP SM	WN	RH	FL IN	F	EX	N
PHIV3	PHARMACY IV ADMIXTURE, HIGH VOLUME	VT	GLG	AT2	2700	900	35	40	3	1100	F	R	L	.	.	.	.	.	.	.	.	.	.	.	.	.	.	+	4	2	*	20	.	.	.	.	R
		SV	GPT	AT1	9-0	3-0	40		60	.	.			.													.				*	68					.
PHMP1	PHARMACY MANUFACTURING & PREPACK, LOW VOLUME	VT	GPT	AT1	2700	900	35	40	5	1100	F	R	L	.	.	.	.	.	.	.	.	.	.	.	.	.	.	+	4	2	*	20	.	.	.	.	.
		.	.	.	9-0	3-0	40		100	.	.			.													.				*	68					.
PHMP2*	PHARMACY MANUFACTURING & PREPACK MED VOL	VT	GPT	AT1	2700	900	35	40	5	1100	F	R	L	.	.	.	.	.	.	.	.	.	.	.	.	.	.	+	4	2	*	20	.	.	.	.	.
		.	.	.	9'-0"	3'-0"	40		100	.	.			.													.				*	68					.
PHMP3*	PHARMACY MANUFACTURING & PREPACK HIGH VOL	VT	GPT	AT1	2700	900	35	40	5	1100	F	R	L	.	.	.	.	.	.	.	.	.	.	.	.	.	.	+	4	2	*	20	.	.	.	.	.
		.	.	.	9'-0"	3'-0"	40		100	.	.			.													.				*	68					.
PHOD1	PHARMACY STORAGE/DISPENSING LOW VOLUME	CP	GPT	AT1	2700	1050	35	40	5	1100	F	R	L	.	.	.	.	.	.	.	.	.	.	.	.	.	.	+	4	2	*	20	.	.	.	.	.
		VT	GPT	.	9-0	3-6	40		100	.	.			.													.				*	68					.
PHOD2	PHARMACY STORAGE/DISPENSING MED VOLUME	VT	GPT	AT1	2700	1050	35	40	5	1100	F	R	L	.	.	.	.	.	.	.	.	.	.	.	.	.	.	+	4	2	*	20	.	.	.	.	.
		VT	GPT	.	9-0	3-6	40		100	.	.			.													.				*	68					.
PHOD3*	PHARMACY STORAGE/DISPENSING HIGH VOLUME	VT	GPT	AT1	2700	1066	35	45	5	1100	F	R	L	.	.	.	.	.	.	.	.	.	.	.	.	.	.	+	4	2	*	20	.	.	.	.	.
		.	.	.	9'-0"	3'-6"	40		100	.	.			.													.				*	68					.
PHUD1	PHARMACY UNIT DOSE CENTER	VT	GLG	AT1	2700	900	35	40	3	1100	F	R	L	.	.	.	.	.	.	.	.	.	.	.	.	.	.	+	4	2	*	20	.	.	.	.	.
		SV	GPT	.	9-0	3-0	40		60	.	.			.													.				*	68					.
PLAY1	PLAYROOM, PEDIATRICS	CP	GPT	AT1	2700	1200	35	45	3	300	.	.	.	.	.	.	.	.	.	.	.	.	.	.	.	.	.	0	6	1.5	*	21	.	.	.	.	.
		VT	GAF	.	9-0	4-0	40		60	.	.			.													.				*	70					.
PMCC1*	PLANT MAINTENANCE CONTROL CENTER	CS	GPT	AT1	VAR	VAR	35	50	5	500	.	R	LS	S	.	.	.	.	.	.	.	.	.	.	.	.	.	0	4	1	*	20	.	.	.	.	.
		VT	SSP	SSP	.	VAR	40		100	.	.			.													.				*	68					.
PMCW1	PLANT MAINTENANCE, COMMON WORK AREA	CS	GPT	AT1	VAR	VAR	35	50	5	300	.	.	.	.	.	.	.	1	.	.	.	.	.	.	.	.	.	0	6	1	*	21	.	.	.	Y	M
		VT	SSP	SSP	9-0	VAR	40		100	700	.			.													.				*	70					.
PMWS1	PLANT MAINTENANCE, WORKSTATION	CS	GPT	AT1	VAR	VAR	35	50	5	300	.	.	.	.	.	.	.	1	.	.	.	.	.	.	.	.	.	0	4	1	*	20	.	.	.	.	.
		VT	SSP	SSP	9-0	VAR	40		100	700	.			.													.				*	68					.
PTAT1	PHYS THERAPY AMPUTEE TRAINING AREA	CP	GPT	AT1	2700	900	35	40	3	500	.	.	.	.	.	.	.	.	1	.	.	.	1	.	.	.	B	0	6	2	24	21	.	.	.	.	.
		VT	GLG	.	9-0	3-0	40		60	.	.			.													.				75	70					.

Room Code	Room Name	ARCHITECTURAL MATRL+FIN FL	WL	CLG	CLG HT	DOOR SIZE	NOISE RM	SC	STRUCTURAL FLR LOAD	ELECTRICAL LIGHT LEV	N	ES PWR PWR	LT	N	MEDICAL GASES MCA	DCA	LA	PA	MV	DHV	DLV	LDE	OX	NO	NI	WAGD	N	HVAC BL	AC	OA	TEMP SM	WN	RH	FL IN	F	EX	N
PTBT1	PHYS THERAPY BACK THERAPY PROGRAM	CP	GPT	AT1	2700	900	35	40	3	500	.	.	.	.	.	.	.	.	.	.	.	.	.	.	.	.	.	0	6	2	*	21	.	.	.	.	.
		VT	GPT	.	9-0	3-0	40		60	.	.			.													.				*	70					.
PTCW1	PHYS THERAPY CUBICLE WORKSTATION	VT	GPT	AT1	2700	900	35	40	3	500	.	.	.	.	.	.	.	.	.	.	.	.	.	.	.	.	.	0	4	2	*	21	.	.	.	.	.
		CP	GPT	.	9-0	3-0	40		60	.	.			.													.				*	70					.
PTEA1	PHYS THERAPY EXERCISE AREA - GYM	VT	GPT	AT1	2700	900	35	40	3	300	.	.	.	.	.	.	.	.	.	.	.	.	.	.	.	.	.	-	6	2	*	21	.	.	.	Y	.
		CP	GPT	.	9-0	3-0	40		60	.	.			.													.				*	70					.
PTEM1	PHYS THERAPY ELECTROMYOGRAPHY (EMG)	VT	GPT	AT1	2700	900	35	40	3	500	.	.	.	.	.	.	.	.	.	.	.	.	.	.	.	.	.	0	6	2	*	21	.	.	.	.	.
		.	GPT	.	9-0	3-0	40		60	.	.			.													.				*	70					.
PTES1	PHYS THERAPY EXERCISE STATION	VT	GPT	AT1	2700	900	35	40	3	300	.	.	.	.	.	.	.	.	.	.	.	.	.	.	.	.	.	-	6	2	*	21	.	.	.	.	.
		CP	GPT	.	9-0	3-0	40		60	.	.			.													.				*	70					.
PTEW1	PHYS THERAPY EXTREM WHIRLP ARM/LEG	VT	GLG	AT2	2700	900	35	40	C	200	.	.	.	.	.	.	.	.	.	.	.	.	.	.	.	.	.	-	6	2	*	21	.	.	.	Y	.
		CT	CT	GLG	9-0	3-0	40		C	.	.			.													.				*	70					.
PTGL1	PHYS THERAPY GAIT OBS. LANE	VT	GPT	AT1	2700	900	35	40	3	500	.	.	.	.	.	.	.	.	.	.	.	.	.	.	.	.	.	0	6	2	*	21	.	.	.	.	.
		CT	CT	.	9-0	3-0	40		60	.	.			.													.				*	70					.
PTIS1	PHYS THERAPY ISOKINETIC STA - DIAG	VT	GPT	AT1	2700	900	35	40	C	300	.	.	.	.	.	.	.	.	.	.	.	.	.	.	.	.	.	-	6	2	*	21	.	.	.	Y	.
		.	GPT	.	9-0	3-0	40		C	.	.			.													.				*	70					.
PTPR1	PHYS THERAPY PEDIATRIC REHAB	VT	GPT	AT1	2700	900	35	40	3	500	.	.	.	.	.	.	.	.	.	.	.	.	.	.	.	.	.	0	6	2	*	21	.	.	.	.	.
		CP	GPT	.	9-0	3-0	40		60	.	.			.													.				*	70					.
PTTC1	PHYS THERAPY TREATMENT CUBICLE	VT	GPT	AT1	2700	900	35	40	3	500	.	.	.	.	.	.	.	.	.	.	.	.	.	.	.	.	.	0	4	2	*	21	.	.	.	.	.
		CP	GPT	.	9-0	3-0	40		60	.	.			.													.				*	70					.
PTWT1	PHYS THERAPY WHIRLPOOL TREATMENT	CT	GPT	AT1	2700	900	35	40	C	500	.	.	.	.	.	.	.	.	.	.	.	.	.	.	.	.	.	-	6	2	*	21	.	.	.	.	.
		QT	CT	GLG	9-0	3-0	40		.	.	.			.													.				*	70					.
PTWW1	PHYS THERAPY WHIRLPOOL WORKSTATION	CT	GPT	AT1	2700	900	35	40	C	500	.	.	.	.	.	.	.	.	.	.	.	.	.	.	.	.	.	-	6	2	*	21	.	.	.	.	.
		QT	CT	GLG	9-0	3-0	40		.	.	.			.													.				*	70					.
RAA01	CHAPEL ALTAR	CP	GPT	AT1	2700	OPEN	20	40	3	300	A	.	.	.	.	.	.	.	.	.	.	.	.	.	.	.	.	0	4	2	*	20	.	.	.	.	.
		.	SP	SP	9-0	OPEN	25		60	.	.			.													.				*	68					.

APPENDIX A

ARCHITECTURAL AND ENGINEERING DESIGN REQUIREMENTS

Room Code	Room Name	ARCHITECTURAL MATRL+FIN FL	WL	CLG	CLG HT	DOOR SIZE	NOISE RM	SC	STRUCTURAL FLR LOAD	ELECTRICAL LIGHT LEV	N	ES PWR PWR	LT	N	MEDICAL GASES MCA	DCA	LA	PA	MV	DHV	DLV	LDE	OX	NO	NI	WAGD	N	HVAC BL	AC	OA	TEMP SM	WN	RH	FL IN	F	EX	N
RABS1	RELIGIOUS ACTIVITY, CHANCEL	CP	GPT	AT1	2700	900	20	40	3	300	A	.	.	.	.	.	.	.	.	.	.	.	.	.	.	.	0	4	2	*	20	.	.	.	.	.
		.	SP	SP	9-0	3-0	25		60	.	.			.												.				*	68					.
RAMR1	RELIGIOUS ACTIVITY MEDITATION ROOM	CP	GPT	AT1	2700	900	20	40	3	300	A	.	.	.	.	.	.	.	.	.	.	.	.	.	.	.	0	4	2	*	20	.	.	.	.	.
		.	SSP	.	9-0	3-0	25		60	.	.			.												.				*	68					.
RAS01	CHAPEL SEATING AREA, FIXED SEATS	CP	GPT	AT1	VAR	OPEN	20	40	3	150	A	.	.	.	.	.	.	.	.	.	.	.	.	.	.	.	0	4	2	*	20	.	.	.	.	.
		.	SSP	.	VAR	OPEN	25		60	.	.			.												.				*	68					.
RASR1	CHAPEL, SACRISTY/STORAGE	CP	GPT	AT1	2700	900	30	40	6	100	.	.	.	.	.	.	.	.	.	.	.	.	.	.	.	.	0	4	2	*	20	.	.	.	.	.
		VT	.	.	9-0	3-0	35		125	.	.			.												.				*	68					.
RCA01	RESUSCITATION CART ALCOVE	VT	GPT	AT1	2400	OPEN	35	40	3	150	.	R	.	.	.	.	.	.	.	.	.	.	.	.	.	.	0	.	.	.	.	.	.	.	.	.
		.	.	.	8-0	OPEN	40		60	.	.			.												.				.	.					.
RDC01	RENAL DIALYSIS CHAIR STATION	VT	GPT	AT1	2600	1200	30	40	3	500	C	R	L	.	2	.	.	.	1	.	.	.	1	.	.	.	B	+	6	2	*	21	.	14	.	.	.
		SV	GLG	AT2	8-6	4-0	35		60	1100	.			.												.				*	70					.
RDC02	RENAL DIALYSIS CHAIR STATION NEG PR	VT	GPT	AT1	2600	1200	30	40	3	500	C	R	L	.	2	.	.	.	1	.	.	.	1	.	.	.	B	-	6	2	*	21	.	14	.	Y	.
		SV	GLG	AT2	8-6	4-0	35		60	1100	.			.												.				*	70					.
RDP01	RENAL DIALYSIS, STORAGE, PORTABLE	VT	GPT	AT1	2600	1200	30	40	3	500	C	R	L	.	.	.	.	.	.	.	.	.	.	.	.	.	+	6	2	*	21	.	14	.	.	.
		SV	GLG	AT2	8-6	4-0	35		60	1100	.			.												.				*	70					.
RDPD1	RENAL DIALYSIS PERITONEAL STATION	VT	GPT	AT1	2600	1200	30	40	3	500	C	R	L	.	2	.	.	.	1	.	.	.	1	.	.	.	B	+	6	2	*	21	.	14	.	.	.
		SV	GLG	AT2	8-6	4-0	35		60	1100	.			.												.				*	70					.
RDWT1*	RENAL DIALYSIS WATER TREATMENT RM	VT	GPT	AT1	2600	900	30	40	.	500	.	.	L	U	.	.	.	.	.	.	.	.	.	.	.	.	-	.	.	.	10	.	.	.	Y	.
		SV	GLG	AT2	8'-6"	3-0"	35		.	.	.			.												.				.	50					.
RECP1	RECEPTION	VT	GPT	AT1	2700	900	35	40	3	300	.	.	.	.	.	.	.	.	.	.	.	.	.	.	.	.	0	4	1	*	21	.	14	.	.	.
		CP	SSP	.	9-0	3-0	40		60	500	.			.												.				*	70					.
RECP2	RECEPTION/WORKSTATION (COF)	VT	GPT	AT1	2700	900	35	40	3	300	.	.	.	.	.	.	.	.	.	.	.	.	.	.	.	.	0	4	1	*	21	.	14	.	.	.
		CP	SSP	.	9-0	3-0	40		60	500	.			.												.				*	70					.
RECP3	RECEPTION/INFORMATION DESK	VT	GPT	AT1	VAR	OPEN	35	40	3	300	.	.	.	.	.	.	.	.	.	.	.	.	.	.	.	.	0	4	1	*	21	.	14	.	.	.
		SSP	SSP	.	VAR	OPEN	40		60	500	.			.												.				*	70					.

Room Code	Room Name	ARCHITECTURAL MATRL+FIN FL	WL	CLG	CLG HT	DOOR SIZE	NOISE RM	SC	STRUCTURAL FLR LOAD	ELECTRICAL LIGHT LEV	N	ES PWR PWR	LT	N	MEDICAL GASES MCA	DCA	LAA	PAA	MV	DHV	DLV	LDE	OX	NO	NI	WAGD	N	HVAC BL	AC	OA	TEMP SM	WN	RH	FL IN	F	EX	N
RER01*	REFRIGERATION EQUIPMENT ROOM	CS	GPT	VAR	VAR	1200	35	50	B	200	.	.	LS	E	.	.	.	.	.	.	.	.	.	.	.	.	.	.	.	.	SP	SP	.	.	.	.	.
		VT	.	VAR	VAR	4'-0"	40		B	.	.			.												.					.	.					.
RPR01	REPRODUCTION ROOM, STANDARD	VT	GPT	AT1	2400	900	35	50	5	500	.	.	.	.	.	.	.	.	.	.	.	.	.	.	.	.	.	0	10	2	*	21	.	.	.	.	.
		CP	.	.	8-0	3-0	40		100	.	.			.												.					*	70					.
RPR02	REPRODUCTION ROOM, HIGH VOLUME	VT	GPT	AT1	2400	900	35	50	7.5	700	.	.	.	.	.	.	.	.	.	.	.	.	.	.	.	.	.	0	10	2	*	21	.	.	.	.	.
		CP	.	.	8-0	3-0	40		150	.	.			.												.					*	70					.
RRIR1	RECOVERY ROOM, ISOLATION	SV	GLG	GLG	2700	1200	30	40	3	300	B	R	L	.	1	.	.	.	3	.	.	.	3	.	.	.	B	--	12	2	24	21	Y	14	.	Y	O
		.	.	GPT	9-0	4-0	35		60	1100	.			.												.					75	70					.
RROP1	RECOVERY CUBICLE, PHASE II	SV	GLG	AT2	2700	1200	30	40	3	300	B	R	L	.	1	.	.	.	3	.	.	.	3	.	.	.	B	+	6	2	*	21	.	14	.	.	.
		VT	GPT	AT1	9-0	4-0	35		60	1100	.			.												.					*	70					.
RRSS1	RECOVERY ROOM, PHASE I	SV	GLG	GLG	2700	1200	30	40	3	300	B	R	L	.	1	.	.	.	3	.	.	.	3	.	.	.	B	+	6	2	24	21	Y	14	14	.	O
		.	.	AT2	9-0	4-0	35		60	1100	.			.												.					75	70					.
RRSS3	RECOVERY ROOM OUTPATIENT SEATED	SV	GLG	AT2	2700	1200	30	40	3	300	B	.	LS	.	1	.	.	.	3	.	.	.	3	.	.	.	B	+	6	2	*	21	.	14	.	.	.
		VT	GPT	AT1	9-0	4-0	35		60	700	.			.												.					*	70					.
SEC01	SECRETARY, GENERAL USE	CP	GPT	AT1	2400	900	30	40	3	500	.	.	.	.	.	.	.	.	.	.	.	.	.	.	.	.	.	0	4	1	*	20	.	.	.	.	.
		VT	GPT	.	8-0	3-0	35		60	.	.			.												.					*	68					.
SEC02	SECRETARY, COMMAND	CP	GPT	AT1	2400	900	30	40	3	500	.	.	.	.	.	.	.	.	.	.	.	.	.	.	.	.	.	0	4	1	*	20	.	.	.	.	.
		VT	.	.	8-0	3-0	35		60	.	.			.												.					*	68					.
SHWR1*	SHOWER ROOM	CT	GCT	GLG	VAR	900	35	45	3	200	.	.	.	.	.	.	.	.	.	.	.	.	.	.	.	.	.	-	6	1.5	*	24	.	.	.	Y	.
		SSP	SSP	.	VAR	3'-0"	40		60	.	.			.												.					*	75					.
SHWR2*	SHOWER, INPATIENT UNIT	CT	GCT	GLG	VAR	900	35	45	3	200	.	.	LS	.	.	.	.	.	.	.	.	.	.	.	.	.	.	-	6	1.5	*	24	.	.	.	Y	.
		SSP	SSP	.	VAR	3'-0"	40		60	.	.			.												.					*	75					.
SINK1*	SINK STAFF HANDWASHING	VT	GPT	VAR	VAR	900	35	45	3	.	.	.	.	.	.	.	.	.	.	.	.	.	.	.	.	.	.	0	4	1	*	20	.	.	.	.	.
		SSP	SSP	.	VAR	3'-0"	40		60	.	.			.												.					*	68					.
SL001	STAFF LOUNGE	VT	GPT	AT1	2400	900	35	45	3	300	.	.	.	.	.	.	.	.	.	.	.	.	.	.	.	.	.	0	5	1	*	20	.	.	.	.	.
		CP	GPT	.	8-0	3-0	40		60	.	.			.												.					*	68					.

Room Code	Room Name	ARCHITECTURAL MATRL+FIN FL	WL	CLG	CLG HT	DOOR SIZE	NOISE RM	SC	STRUCTURAL FLR LOAD	ELECTRICAL LIGHT LEV	N	ES PWR PWR	LT	N	MEDICAL GASES MCA	DCA	LA	PA	MV	DHV	DLV	LDE	OX	ON	NI	WAGD	N	HVAC BL	AC	OA	TEMP SM	WN	RH	FL IN	F	EX	N
SL002*	TEAM INTERACTION STATION CLINIC OF THE FUTURE (COF)	CP	GPT	AT1	2400	900	30	40	3	300	.	.	.	.	.	.	.	.	.	.	.	.	.	.	.	.	.	0	4	1	*	20	.	.	.	.	.
		.	.	.	8'-0"	3'-0"	35		60	.	.			.													.				*	68					.
SRCH1	STORAGE RM, CHARGING, BATTERY/EQUIP	VT	GPT	AT1	2400	900	35	40	10	50	.	.	.	E	.	.	.	.	.	.	.	.	.	.	.	.	E	-	10	.	29	18	.	.	.	Y	M
		CS	.	GPT	8-0	3-0	40		200	.	.			.													.				85	65					.
SRCS1	STORAGE RM, CRUTCH AND SPLINT	VT	GPT	AT1	2400	900	35	40	6	100	.	.	.	.	.	.	.	.	.	.	.	.	.	.	.	.	.	0	4	1	*	20	.	.	.	.	.
		.	.	.	8'-0"	3-0	40		125	.	.			.													.				*	68					.
SRE01	STORAGE RM, EQUIPMENT	VT	GPT	AT1	2400	E	40	40	6	100	.	.	.	.	.	.	.	.	.	.	.	.	.	.	.	.	.	0	4	1	*	20	.	.	.	.	.
		.	.	GPT	8'-0"	.	45		125	.	.			.													.				*	68					.
SRF01	STORAGE RM, FREEZER WALK-IN	VT	SPF	SPF	VAR	SP	.	.	13	200	.	.	LB	E	.	.	.	.	.	.	.	.	.	.	.	.	.	0	0	.	SP	SP	.	.	.	.	.
		SSP	.	.	VAR	SP	.		275	.	.			.													.				SP	SP					.
SRF02	STORAGE RM, FREEZERS - FREESTANDNG	PF	GLG	GLG	VAR	SP	40	40	B	200	.	.	LB	E	.	.	.	.	.	.	.	.	.	.	.	.	.	0	10	2	*	20	.	.	.	Y	.
		SSP	GPT	.	VAR	SP	45		B	.	.			.													.				*	68					.
SRGC1	STORAGE RM, GAS CYLINDERS, EXTERIOR	CS	BPT	GPT	2700	900	45	40	7.5	50	.	.	.	.	.	.	.	.	.	.	.	.	.	.	.	.	.	-	6	.	.	.	.	.	.	Y	G
		.	GPT	SSP	9-0	3-0	50		150	.	.			.													.				.	.					.
SRGC2	STORAGE RM, GAS CYLINDERS, INTERIOR	VT	GLG	GLG	2400	900	35	40	7.5	200	.	.	LB	.	.	.	.	.	.	.	.	.	.	.	.	.	.	-	6	.	*	20	.	.	.	Y	G
		SV	GPT	SSP	8-0	3-0	40		150	.	.			.													.				*	68					.
SRHM1	STORAGE RM, HAZARDOUS MATERIALS	CS	BPT	GPT	2400	900	45	40	6	100	E	.	LB	.	.	.	.	.	.	.	.	.	.	.	.	.	.	-	6	.	.	.	.	.	.	Y	G
		.	GPT	.	8'-0"	3-0	50		125	.	.			.													.				.	.					.
SRL01	STORAGE RM, LAB MICROSCOPE SLIDES	VT	GPT	AT1	2400	900	35	40	6	100	.	.	.	.	.	.	.	.	.	.	.	.	.	.	.	.	.	+	4	1	*	21	.	13	.	.	.
		.	.	AT2	8'-0"	3-0	40		125	.	.			.													.				*	68					.
SRL02	STORAGE RM, LAB PARAFFIN BLOCKS	VT	GPT	AT1	2400	900	35	40	6	100	.	.	.	.	.	.	.	.	.	.	.	.	.	.	.	.	.	+	4	1	*	21	.	13	.	.	.
		.	.	AT2	8'-0"	3-0	40		125	.	.			.													.				*	68					.
SRLW1	STORAGE RM/AREA, LITTER-WHEELCHAIR	VT	GPT	AT1	2400	OPEN	35	40	6	100	.	.	.	.	.	.	.	.	.	.	.	.	.	.	.	.	.	0	4	1	*	21	.	.	.	.	.
		.	.	.	8'-0"	OPEN	40		125	.	.			.													.				*	68					.
SRPB1	STORAGE RM, PATIENT BAGGAGE	VT	GPT	AT1	2400	900	35	40	6	100	.	.	.	.	.	.	.	.	.	.	.	.	.	.	.	.	.	0	4	1	*	20	.	.	.	.	.
		.	.	.	8'-0"	3-0	40		125	.	.			.													.				*	68					.

APPENDIX A

ARCHITECTURAL AND ENGINEERING DESIGN REQUIREMENTS

Room Code	Room Name	ARCHITECTURAL MATRL+FIN FL	WL	CLG	CLG HT	DOOR SIZE	NOISE RM	SC	STRUCTURAL FLR LOAD	ELECTRICAL LIGHT LEV	N	ES PWR PWR	LT	N	MEDICAL GASES MCA	DCA	LA	PA	MV	DHV	DLV	LDE	OX	NO	NI	WAGD	N	HVAC BL	AC	OA	TEMP SM	WN	RH	FL IN	F	EX	N
SRPS1	STORAGE RM, PARTS STORAGE	VT	GPT	AT1	2400	900	35	40	6	100	.	.	.	.	.	.	.	.	.	.	.	.	.	.	.	.	.	0	4	1	*	20	.	.	.	.	.
		CS	.	.	8'-0"	3-0	40		125	.	.			.												.					*	68					.
SRR01	STOR. RM REFRIGERATOR, WALK-IN	PF	SPF	SPF	VAR	SP	.	.	13	200	.	.	LB	E	.	.	.	.	.	.	.	.	.	.	.	.	.	0	.	.	.	.	.	.	.	.	.
		.	.	.	VAR	SP	.		275	.	.			.												.					.	.					.
SRR02	STORAGE RM, REFRIGERATORS FREESTND	QT	GLG	GLG	VAR	SP	.	.	B	200	.	.	LB	E	.	.	.	.	.	.	.	.	.	.	.	.	.	0	.	.	.	.	.	.	.	.	.
		SV	GPT	GPT	VAR	SP	.		B	.	.			.												.					.	.					.
SRS01	STORAGE RM, SHELVING	VT	GPT	AT1	2700	900	40	40	7.5	100	.	.	.	.	.	.	.	.	.	.	.	.	.	.	.	.	.	0	4	1	*	20	.	.	.	.	.
		CS	.	.	9-0	3-0	45		150	.	.			.												.					*	68					.
SRSE1	STORAGE RM, EQUIPMENT/SHELVING	VT	GPT	AT1	2700	900	.	.	7.5	100	.	.	.	.	.	.	.	.	.	.	.	.	.	.	.	.	.	0	4	1	*	20	.	.	.	.	.
		CS	.	.	9-0	3-0	.		150	.	.			.												.					*	68					.
SSC01	SECURE STORAGE, CAGE	VT	GPT	AT1	2700	900	.	.	6	100	.	.	.	.	.	.	.	.	.	.	.	.	.	.	.	.	.	0	4	1	*	20	.	.	.	.	.
		CS	.	.	9-0	3-0	.		125	.	.			.												.					*	68					.
SSS01	SECURE STORAGE, SAFE	VT	SSP	SSP	VAR	SP	.	.	C	100	.	.	.	.	.	.	.	.	.	.	.	.	.	.	.	.	.	0	.	.	.	.	.	.	.	.	.
		CS	.	.	VAR	SP	.		C	.	.			.												.					.	.					.
SSV01	SECURE STORAGE, VAULT	CS	CCS	CCS	VAR	SSP	.	.	6	100	.	.	.	.	.	.	.	.	.	.	.	.	.	.	.	.	.	0	6	1	*	20	.	.	.	.	.
		SSP	SSP	SSP	VAR	SSP	.		125	.	.			.												.					*	68					.
TCGS1	TREATMENT CUBICLE GENERAL SURGICAL	SV	GLG	AT2	2700	900	30	40	3	500	D	.	.	.	1	.	.	.	1	.	.	.	1	.	.	.	.	+	12	3	20	23	.	14	.	.	.
		VT	.	AT1	9-0	3-0	35		60	1100	.			.												.					68	73					.
TLTF0	TOILET/SHOWER, HANDICAP ACCESSIBLE	SV	GCT	GLG	2400	900	35	40	3	200	.	.	.	.	.	.	.	.	.	.	.	.	.	.	.	.	.	EX	10	.	.	.	.	.	.	Y	.
		CT	SPF	SPF	8-0	3-0	40		60	.	.			.												.					.	.					.
TLTF1	TOILET, FEMALE, SINGLE	CT	GPT	GPT	2400	900	35	40	3	200	.	.	.	.	.	.	.	.	.	.	.	.	.	.	.	.	.	EX	10	.	.	20	.	.	.	Y	.
		SSP	CT	.	8-0	3-0	40		60	.	.			.												.					.	68					.
TLTF2	TOILET FEMALE, MULTIPLE	CT	GPT	GPT	2400	900	35	40	3	300	.	.	.	.	.	.	.	.	.	.	.	.	.	.	.	.	.	EX	10	.	.	20	.	.	.	Y	.
		SSP	CT	.	8-0	3-0	40		60	.	.			.												.					.	68					.
TLTM1	TOILET, MALE, SINGLE	CT	GPT	GPT	2400	900	35	40	3	200	.	.	.	.	.	.	.	.	.	.	.	.	.	.	.	.	.	EX	10	.	.	20	.	.	.	Y	.
		SSP	CT	SSP	8-0	3-0	40		60	.	.			.												.					.	68					.

APPENDIX A

ARCHITECTURAL AND ENGINEERING DESIGN REQUIREMENTS

Room Code	Room Name	ARCHITECTURAL MATRL+FIN FL	WL	CLG	CLG HT	DOOR SIZE	NOISE RM	SC	STRUCTURAL FLR LOAD	ELECTRICAL LIGHT LEV	N	ES PWR PWR	LT	N	MEDICAL GASES MCA	DCA	LA	PA	MV	DHV	DLV	LDE	OX	NO	NI	WAGD	N	HVAC BL	AC	OA	TEMP SM	WN	RH	FL IN	F	EX	N
TLTM2	TOILET, MALE, MULTIPLE	SV	GPT	GPT	2400	900	35	40	3	300	.	.	.	.	.	.	.	.	.	.	.	.	.	.	.	.	.	EX	10	.	.	20	.	.	.	Y	.
		SSP	CT	SSP	8-0	3-0	40		60	.	.			.													.				.	68					.
TLTP1	TOILET PSYCHIATRIC	CT	GPT	GPT	2400	1050	35	40	3	200	.	.	.	.	.	.	.	.	.	.	.	.	.	.	.	.	.	EX	10	.	.	20	.	.	.	Y	.
		SSP	CT	SSP	8-0	3-6	40		60	.	.			.													.				.	68					.
TLTP3	TOILET/SHOWER PSYCHIATRIC	CT	GPT	GPT	2400	1050	35	40	3	200	.	.	.	.	.	.	.	.	.	.	.	.	.	.	.	.	.	EX	10	.	.	20	.	.	.	Y	.
		SSP	GLG	GPT	8-0	3-6	40		60	.	.			.													.				.	68					.
TLTS1	TOILET, SHOWER, SINGLE	CT	CT	GPT	2400	900	35	40	3	200	.	.	.	.	.	.	.	.	.	.	.	.	.	.	.	.	.	EX	10	.	.	20	.	.	.	Y	.
		SSP	.	SSP	8-0	3-0	40		60	.	.			.													.				.	68					.
TLTS2*	TOILET/SINK/SHOWER INPATIENT	CT	CT	GLG	2400	900	35	40	3	200	.	.	LS	.	.	.	.	.	.	.	.	.	.	.	.	.	.	EX	10	.	.	20	.	.	.	Y	.
		SV	GLG	GPT	8'-0"	3'-0"	40		60	.	.			.													.				.	68					.
TLTU1*	TOILET, UNISEX	CT	GPT	GPT	2400	900	35	40	3	200	.	.	.	.	.	.	.	.	.	.	.	.	.	.	.	.	.	EX	10	.	.	20	.	.	.	Y	.
		VT	CT	AT1	8'-0"	3'-0"	40		60	.	.			.													.				.	68					.
TREE1	TX ROOM ENDOSCOPIC EXAM (UGI)	SV	GLG	GLG	2700	D	30	45	3	500	D	R	LS	.	1	.	.	.	2	.	.	.	1	.	.	.	.	-	6	2	*	23	.	14	.	Y	.
		.	.	.	9-0	.	35		60	1100	.			.													.				*	73					.
TREN1	TX ENT	SV	GLG	GLG	2700	900	25	40	3	500	D	.	.	.	.	.	.	.	1	.	.	.	1	.	.	.	.	0	6	2	*	23	.	14	.	.	.
		.	.	.	9-0	3-0	30		60	1100	.			.													.				*	73					.
TREN2*	AUDIOLOGY TESTING ROOM	CP	GPT	AT1	VAR	VAR	VAR	VAR	.	500	.	.	.	.	.	.	.	.	.	.	.	.	.	.	.	.	.	0	6	2	*	23	.	14	.	.	.
		VT	.	GPT	VAR	VAR	VAR		.	.	.			.													.				*	73					.
TRET1	TX EMERGENCY TRAUMA ROOM 2 BED	SV	GLG	GLG	2700	H	35	50	3	1100	D	RA	LB	.	.	.	.	.	3	.	.	.	2	.	.	.	B	+	12	5	24	23	.	14	.	.	.
		VT	GPT	AT2	9-0	.	40		60	.	.			.													.				75	73					.
TRET3*	TX EMERGENCY TRAUMA ROOM, 1 BED	SV	GLG	GLG	2700	1200	35	50	3	1100	D	RA	LB	.	.	.	.	.	2	.	.	.	2	.	.	.	B	+	12	5	24	23	.	14	.	.	.
		VT	GPT	AT2	9'-0"	4'-0"	40		60	.	.			.													.				75	73					.
TRET4*	TX ROOM, EMERGENCY CARE, 1 BED	SV	GLG	GLG	2700	1200	35	50	3	1100	D	RA	LB	.	.	.	.	.	2	.	.	.	2	.	.	.	B	+	12	5	24	23	.	14	.	.	.
		VT	GPT	AT2	9'-0"	4'-0"	40		60	.	.			.													.				75	73					.
TRET5*	TX ROOM, EMERGENCY CARE, 2 BED	SV	GLG	GLG	2700	1200	35	50	3	1100	D	RA	LB	.	.	.	.	.	2	.	.	.	2	.	.	.	B	+	12	5	24	23	.	14	.	.	.
		VT	GPT	AT2	9'-0"	4'-0"	40		60	.	.			.													.				75	73					.

APPENDIX A

ARCHITECTURAL AND ENGINEERING DESIGN REQUIREMENTS

Room Code	Room Name	ARCHITECTURAL MATRL+FIN FL	WL	CLG	CLG HT	DOOR SIZE	NOISE RM	SC	STRUCTURAL FLR LOAD	ELECTRICAL LIGHT LEV	N	ES PWR PWR	LT	N	MEDICAL GASES MCA	DCA	LA	PA	MV	DHV	DLV	LDE	OX	NO	NI	WAGD	N	HVAC BL	AC	OA	TEMP SM	WN	RH	FL IN	F	EX	N
TREY1	TX EYE - OPHTHALMOLOGY	VT	GPT	AT2	2400	900	30	40	3	500	D	.	.	.	.	.	.	.	1	.	.	.	1	.	.	.	.	0	6	2	*	23	.	14	.	.	.
		SV	.	GLG	8'-0"	3-0	35		60	1100	.			.													.				*	73					.
TREY2*	TX EYE - LASER	VT	GPT	AT2	2400	900	30	40	3	700	A	.	LS	U	.	.	.	.	1	.	.	.	1	.	.	.	.	-	6	2	SP	SP	.	14	.	.	.
		SV	GLG	.	8'-0"	3'-0"	35		60	.	C			.													.				.	.					.
TREY3*	TX ROOM PRK/LASIK	VT	GPT	GLG	2400	900	30	40	3	700	A	.	LS	U	.	.	.	.	1	.	.	.	1	.	.	.	.	-	6	2	SP	SP	.	14	.	.	.
		SV	GPT	AT2	8'-0"	3'-0"	35		60	.	C			.													.				.	.					.
TRGM1	TRT ROOM, GENERAL, 1 BED	SV	GLG	GLG	2700	VAR	30	40	3	500	D	.	.	.	.	.	.	.	1	.	.	.	1	.	.	.	.	0	6	2	*	23	.	14	.	.	.
		VT	GPT	AT2	9-0	VAR	35		60	1100	.			.													.				*	73					.
TRGM2*	TX ROOM, GENERAL, 2 BED	SV	GLG	GLG	2700	VAR	30	40	3	500	D	.	.	.	.	.	.	.	1	.	.	.	1	.	.	.	B	0	6	2	*	23	.	14	.	.	.
		VT	GPT	AT2	9'-0"	VAR	35		60	1100	.			.													.				*	73					.
TRGS1	TX ROOM GENERAL SURGICAL	SV	GLG	GLG	2700	VAR	30	40	3	500	D	.	.	.	.	.	.	.	1	.	.	.	1	.	.	.	.	0	6	2	*	23	.	14	.	.	.
		.	.	.	9-0	VAR	35		60	1100	.			.													.				*	73					.
TRGS2*	TX RM SURGICAL NEG PRESSURE	SV	GLG	GLG	2700	VAR	30	40	3	500	D	.	LS	U	.	.	.	.	1	.	.	.	1	.	.	.	.	--	12	2	*	23	.	14	.	Y	.
		.	.	.	9'-0"	VAR	35		60	1100	.			.													.				*	73					.
TRGS3*	TX RM GENERAL SURGICAL LASER	SV	GLG	GLG	2700	VAR	30	40	3	500	D	.	LS	U	.	.	.	.	1	.	.	.	1	.	.	.	.	0	4	2	*	20	.	14	.	.	.
		.	.	.	9'-0"	VAR	35		60	1100	.			.													.				*	68					.
TROB1	TX OB/GYN	SV	GLG	GLG	2700	VAR	30	40	3	500	D	.	.	.	.	.	.	.	1	.	.	.	1	.	.	.	.	0	6	2	*	23	.	14	.	.	.
		VT	.	.	9-0	VAR	35		60	1100	.			.													.				*	73					.
TROR1	TX ORTHOPEDIC	SV	GLG	GLG	2700	VAR	30	40	3	500	D	.	.	.	.	.	.	.	1	.	.	.	1	.	.	.	.	0	6	2	*	23	.	14	.	.	.
		VT	.	.	9-0	VAR	35		60	1100	.			.													.				*	73					.
TRPE1	TX ROOM PROCTOSCOPIC EXAM (LGI)	SV	GLG	GLG	2700	VAR	30	45	3	500	D	R	LS	.	1	.	.	.	2	.	.	.	1	.	.	.	.	-	10	2	*	23	.	14	.	Y	.
		VT	.	.	9-0	VAR	35		60	1100	.			.													.				*	73					.
TRPE2	TX PULMONARY BRONCHOSCOPY	SV	GLG	GLG	2700	VAR	30	40	3	500	D	R	LS	.	1	.	.	.	2	.	.	.	1	.	.	.	.	-	12	2	*	23	.	14	.	Y	.
		VT	.	.	9-0	VAR	35		60	1100	.			.													.				*	73					.
UCCL1	UTILITY CLEAN	VT	GPT	AT1	2400	VAR	35	40	5	200	.	.	.	.	.	.	.	.	.	.	.	.	.	.	.	.	.	+	4	1	*	20	.	14	.	.	.
		.	.	.	8-0	VAR	40		100	.	.			.													.				*	68					.

Room Code	Room Name	ARCHITECTURAL MATRL+FIN FL	WL	CLG	CLG HT	DOOR SIZE	NOISE RM	SC	STRUCTURAL FLR LOAD	ELECTRICAL LIGHT LEV	N	ES PWR PWR	LT	N	MEDICAL GASES MCA	DCA	LA	PA	MV	DHV	DLV	LDE	OX	NO	NI	WAGD	N	HVAC BL	AC	OA	TEMP SM	WN	RH	FL IN	F	EX	N
USCL1	UTILITY SOILED	VT	GLG	AT1	2400	900	35	40	5	200	.	.	.	.	.	.	.	.	.	.	.	.	.	.	.	.	.	-	6	1	*	20	.	.	.	Y	.
		SV	.	AT2	8-0	3-0	40		100	.	.			.													.				*	68					.
USCL2*	UTILITY, SCOPE WASH	VT	GLG	AT1	2400	900	35	40	5	500	.	.	.	.	1	.	.	.	1	.	.	.	.	.	.	.	.	-	10	2.5	*	20	.	14	.	Y	M
		SV	.	AT2	8'-0"	3'-0"	40		100	.	.			.													.				*	68					.
UTC01	UTILITY TRASH COLLECTION	CS	GLG	GLG	2400	900	35	40	6	200	.	.	.	.	.	.	.	.	.	.	.	.	.	.	.	.	.	-	10	1	*	20	.	.	.	Y	.
		SSP	SSP	SSP	8-0	3-0	40		125	.	.			.													.				*	68					.
UTC02	UTILITY TRASH CAN DECON	CS	CCS	GLG	2400	900	.	40	B	50	.	.	.	.	.	.	.	1	.	.	.	.	.	.	.	.	.	-	10	1	.	.	.	.	.	Y	.
		SSP	SSP	SSP	8'-0"	3-0	.		B	.	.			.													.				.	.					.
UTLC1	UTILITY TRASH AND LINEN COLLECTION	VT	GLG	GLG	2400	900	.	40	C	200	.	.	.	.	.	.	.	.	.	.	.	.	.	.	.	.	.	-	10	1	*	20	.	.	.	Y	.
		SSP	SSP	SSP	8-0	3-0	.		.	.	.			.													.				*	68					.
VCWA1	VETERINARY CAGE WASH AREA	ER	BEP	GEP	2700	1200	35	50	C	200	.	.	.	.	.	.	.	.	.	.	.	.	.	.	.	.	.	-	10	1	*	20	.	.	.	Y	.
		.	.	.	9-0	4-0	40		.	.	.			.													.				*	68					.
VEX01	VETERINARY EXAMINATION/TX ROOM	AR	BEP	GEP	2700	VET	35	50	C	500	D	R	LB	.	1	.	.	.	1	.	.	.	.	.	1	.	.	0	4	2	*	20	.	.	.	Y	.
		.	.	.	9-0	.	40		.	1100	.			.													.				*	68					.
VFIL1	VETERINARY FOOD INSPECTION LAB	AR	BEP	GEP	2700	1200	35	50	C	500	C	.	LS	.	.	.	.	.	.	.	.	.	.	.	.	.	.	-	6	2	*	20	.	14	.	Y	M
		.	.	.	9-0	4-0	40		.	1100	.			.													.				*	68					.
VFP01	VETERINARY FOOD PREP ROOM	AR	BEP	GEP	2700	1200	35	50	C	500	.	.	LS	.	.	.	.	.	.	.	.	.	.	.	.	.	.	+	6	2	*	20	.	14	.	Y	.
		.	.	.	9-0	4-0	40		.	.	.			.													.				*	68					.
VHAU1	VETERINARY HOLDING AREA UTILITY/STR	AR	BEP	GEP	2700	1200	35	50	C	150	.	.	.	.	.	.	.	.	.	.	.	.	.	.	.	.	.	-	6	2	*	20	.	.	.	Y	.
		.	.	.	9-0	4-0	40		.	.	.			.													.				*	68					.
VKEN1	VETERINARY KENNEL AREA IN/OUTSIDE	ER	BEP	GEP	2700	1200	35	50	C	100	.	.	.	.	.	.	.	.	.	.	.	.	.	.	.	.	.	-	10	5	*	20	.	.	.	Y	L
		.	.	.	9-0	4-0	40		.	300	.			.													.				*	68					.
VKEN2	VETERINARY KENNEL CONFINE CANINE	ER	BEP	GEP	2700	1200	35	50	C	100	.	.	.	.	.	.	.	.	.	.	.	.	.	.	.	.	.	-	10	5	*	20	.	.	.	Y	L
		.	.	.	9-0	4-0	40		.	300	.			.													.				*	68					.
VKEN3*	VETERINARY KENNEL CONFINE FELINE	ER	BEP	GEP	2700	1200	35	50	C	100	.	.	.	.	.	.	.	.	.	.	.	.	.	.	.	.	.	-	10	5	*	26	.	.	.	.	L
		.	.	.	9'-0"	4'-0"	40		.	300	.			.													.				*	79					.

Room Code	Room Name	ARCHITECTURAL MATRL+FIN FL	WL	CLG	CLG HT	DOOR SIZE	NOISE RM	SC	STRUCTURAL FLR LOAD	ELECTRICAL LIGHT LEV	N	ES PWR PWR	LT	N	MEDICAL GASES MCA	DCA	LA	PA	MV	DHV	DLV	LDE	OX	NO	NI	WAGD	N	HVAC BL	AC	OA	TEMP SM	WN	RH	FL IN	F	EX	N
VLAH1	VETERINARY LARGE ANIMAL HOLDING AR	ER	BEP	GEP	2700	VET	35	50	C	100	.	.	LS	.	.	.	.	.	.	.	.	.	.	.	.	.	.	-	10	5	*	26	.	.	.	Y	L
		.	.	.	9-0	.	40		.	300	.			.													.				*	79					.
VLB01	VETERINARY LABORATORY	AR	BEP	GEP	2700	1200	35	40	C	500	C	.	LB	.	.	.	.	.	.	.	.	.	.	.	.	.	.	-	6	2	*	20	.	13	.	.	M
		.	.	.	9-0	4-0	40		.	1100	.			.													.				*	68					.
VPH01	VETERINARY PHARMACY	ER	BEP	GEP	2700	1200	35	40	C	1100	F	R	L	.	.	.	.	.	.	.	.	.	.	.	.	.	.	+	4	2	*	20	.	.	.	.	.
		.	.	.	9-0	4-0	40		.	.	.			.													.				*	68					.
VRHA1	VETERINARY RODENT HOLDING AREA	ER	BEP	GEP	2700	VET	35	40	C	100	.	R	LS	.	.	.	.	.	.	.	.	.	.	.	.	.	.	-	15	15	*	26	.	13	.	Y	.
		.	.	.	9-0	.	40		.	300	.			.													.				*	79					.
VRRP1	VETERINARY RECOVERY ROOM/PREP AREA	ER	BEP	GEP	2700	1200	35	40	C	500	.	RA	LB	.	1	.	.	.	1	.	.	.	1	.	.	.	.	+	6	3	18	26	.	13	.	Y	.
		.	.	.	9-0	4-0	40		.	.	.			.													.				64	79					.
VRUN1	VETERINARY ANIMAL RUN	ER	BEP	GEP	2700	1200	35	40	C	100	.	.	.	.	.	.	.	.	.	.	.	.	.	.	.	.	.	0	6	3	*	20	.	.	.	Y	L
		.	.	.	9-0	4-0	40		.	.	.			.													.				*	68					.
VS001	VETERINARY SURGERY ROOM	ER	BEP	GEP	2700	1200	35	40	C	2100	D	RA	LB	.	1	.	.	.	2	.	.	.	1	.	.	.	.	+	15	7.5	18	26	Y	11	14	Y	C
		.	.	.	9-0	4-0	40		.	.	.			.													.				64	79					.
VXER1	VETERINARY XRAY EXPOSURE ROOM	ER	BEL	GEP	2900	1200	35	40	C	500	I	.	.	4	.	.	.	.	.	.	.	.	.	.	.	.	.	0	4	2	*	20	.	13	.	Y	.
		.	.	.	9-6	4-0	40		.	.	.			.													.				*	68					.
WRC01	WAITING ROOM	CP	GPT	AT1	2700	900	35	40	3	300	.	.	.	.	.	.	.	.	.	.	.	.	.	.	.	.	.	0	6	1	*	20	.	14	.	.	S
		VT	.	.	9-0	3-0	40		60	.	.			.													.				*	68					.
WRC02	WAITING ROOM, ISOLATION	SV	GLG	GLG	2700	900	35	40	3	300	.	.	.	.	.	.	.	.	.	.	.	.	.	.	.	.	.	--	12	2	*	20	.	14	.	.	.
		VT	GPT	GPT	9-0	3-0	40		60	.	.			.													.				*	68					.
WRCH1	WORKROOM, CHARTING AREA	VT	GPT	AT1	2400	900	30	40	3	500	.	.	L	.	.	.	.	.	.	.	.	.	.	.	.	.	.	0	4	1	*	21	.	.	.	.	.
		CP	.	.	8-0	3-0	35		60	.	.			.													.				*	70					.
WRF01	WAITING ROOM, FAMILY	CP	GPT	AT1	2700	900	35	40	3	300	.	.	.	.	.	.	.	.	.	.	.	.	.	.	.	.	.	0	6	1	*	20	.	14	.	.	.
		VT	GPT	.	9-0	3-0	40		60	.	.			.													.				*	68					.
WRL01	WAITING ROOM, LITTER	VT	GPT	AT1	2700	1050	30	40	3	300	.	.	.	.	.	.	.	.	.	.	.	.	.	.	.	.	.	0	4	1	*	21	.	14	.	.	.
		CP	.	.	9-0	3'-6"	40		60	.	.			.													.				*	70					.

Room Code	Room Name	ARCHITECTURAL MATRL+FIN FL	WL	CLG	CLG HT	DOOR SIZE	NOISE RM	SC	STRUCTURAL FLR LOAD	ELECTRICAL LIGHT LEV	N	ES PWR PWR	LT	N	MEDICAL GASES MCA	DCA	LA	PA	MV	DHV	DLV	LDE	OX	NO	NI	WAGD	N	HVAC BL	AC	OA	TEMP SM	WN	RH	FL IN	F	EX	N
XABP1	XRAY ANGIOGRAPHIC PROCEDURE	SV	GLG	AT1	3000	1200	35	40	5	500	D	.	.	U	1	.	.	.	2	.	.	.	1	.	.	.	.	0	6	2	*	23	.	14	.	.	.
		VT	GPT	GPT	10-0	4-0	40		100	.	I			.													.				*	73					.
XACR1	XRAY ANGIOGRAPHIC CONTROL ROOM	SV	GLG	AT1	2400	900	35	40	5	300	.	.	.	U	.	.	.	.	.	.	.	.	.	.	.	.	.	0	6	2	*	21	.	.	.	.	.
		VT	GPT	GPT	8-0	3-0	40		100	.	.			.													.				*	70					.
XACV1	XRAY ANGIOGRAPHIC SYSTEM COMPONENT ROOM	SV	GLG	AT1	2400	900	35	40	5	300	A	.	.	U	.	.	.	.	.	.	.	.	.	.	.	.	.	0	6	2	*	21	.	.	.	.	N
		VT	GPT	.	8-0	3-0	40		100	.	.			.													.				*	70					.
XAIR1	XRAY ANGIO INSTRUMENT ROOM	SV	GLG	AT1	2400	900	35	40	5	300	.	.	.	U	.	.	.	.	.	.	.	.	.	.	.	.	.	0	6	2	*	21	.	.	.	.	.
		VT	GPT	.	8-0	3-0	40		100	.	.			.													.				*	70					.
XCCA1	XRAY CARDIAC SYSTEM COMPONENT ROOM	SV	GLG	AT1	2400	900	35	40	5	500	.	RA	LB	.	.	.	.	.	.	.	.	.	.	.	.	.	.	0	4	2	20	24	.	14	.	.	.
		VT	GPT	.	8-0	3-0	40		100	.	.			.													.				68	75					N
XCCC1	XRAY CARDIAC CATH CONTROL ROOM	SV	GLG	AT1	2400	900	35	40	5	300	A	R	L	.	.	.	.	.	.	.	.	.	.	.	.	.	.	0	4	2	20	24	.	14	.	.	N
		VT	GPT	.	8-0	3-0	40		100	.	.			.													.				68	75					.
XCCE1	XRAY CARDIAC CATH EXPOSURE ROOM	SV	GLG	AT1	3000	1200	35	40	5	300	A	R	L	.	1	.	.	.	2	.	.	.	3	1	.	1	D	+	15	3	24	23	.	14	.	.	C
		VT	GPT	GPT	10-0	4-0	40		100	.	.			.													.				75	73					.
XCCI1	XRAY CARDIAC CATH INST. ROOM	SV	GLG	AT1	2400	900	35	40	5	300	.	.	LS	.	.	.	.	.	.	.	.	.	.	.	.	.	.	+	6	2	20	24	.	14	.	.	.
		VT	GPT	.	8-0	3-0	40		100	.	.			.													.				68	75					.
XCTC1	XRAY COMPUTED TOMOGRAPHY CONTROL AREA	SV	GLG	AT1	2400	1200	35	40	5	300	A	.	.	U	.	.	.	.	.	.	.	.	.	.	.	.	.	0	6	2	*	21	.	.	.	.	.
		VT	GPT	.	8-0	4-0	40		100	.	.			.													.				*	70					.
XCTI1	XRAY COMPUTED TOMOGRAPHY INDEP VIEW CONSO	SV	GLG	AT1	2400	1200	35	40	5	300	A	.	.	U	.	.	.	.	.	.	.	.	.	.	.	.	.	0	4	2	*	21	.	.	.	.	N
		VT	GPT	.	8-0	4-0	40		100	.	.			.													.				*	70					.
XCTS1	XRAY COMPUTED TOMOGRAPHY SCANNER	SV	GLG	AT1	VAR	1200	35	40	5	500	D	.	.	U	.	.	.	.	1	.	.	.	1	.	.	.	.	0	4	2	*	23	.	14	.	.	.
		VT	GPT	GPT	VAR	4-0	40		100	.	I			.													.				*	73					.
XDBD1*	XRAY DIAGNOSTIC BONE DENSITOMETER	VT	GPT	AT1	2700	1200	35	40	5	500	.	.	.	U	.	.	.	.	.	.	.	.	.	.	.	.	.	0	6	2	*	23	.	14	.	.	.
		SV	GLG	GPT	9'-0"	4'-0"	40		100	.	.			.													.				*	73					.
XDCS1	XRAY DIAGNOSTIC CHEST	SV	GLG	AT1	3000	1200	35	40	5	300	C	.	.	U	.	.	.	.	.	.	.	.	.	.	.	.	.	0	6	2	*	23	.	14	.	.	.
		VT	GPT	GPT	10-0	4-0	40		100	.	.			.													.				*	73					.

Room Code	Room Name	ARCHITECTURAL MATRL+FIN FL	WL	CLG	CLG HT	DOOR SIZE	NOISE RM	SC	STRUCTURAL FLR LOAD	ELECTRICAL LIGHT LEV	N	ES PWR PWR	LT	N	MEDICAL GASES MCA	DCA	LA	PA	MV	DHV	DLV	LDE	OX	NO	NI	WAGD	N	HVAC BL	AC	OA	TEMP SM	WN	RH	FL IN	F	EX	N
XDCY1	XRAY DIAG CYSTO RAD ONLY 800 MA	SV	GLG	AT1	3000	1200	35	40	5	500	D	RA	LB	.	1	.	.	.	3	.	.	.	1	1	.	1	D	0	6	2	*	23	.	14	.	.	.
		VT	GPT	GPT	VAR	4-0	40		100	.	I			.													.				*	73					.
XDM01	XRAY DIAG MAMMO	SV	GLG	AT1	3000	1200	35	40	5	500	C	.	.	U	.	.	.	.	.	.	.	.	.	.	.	.	.	0	4	2	*	23	.	14	.	.	.
		VT	GPT	GPT	VAR	4-0	40		100	.	.			.													.				*	73					.
XDM02	XRAY DIAG MAMMO STEREOTATIC	SV	GLG	AT1	3000	1200	35	40	5	500	D	.	.	U	.	.	.	.	1	.	.	.	1	.	.	.	.	0	6	2	*	23	.	14	.	.	.
		VT	GPT	.	VAR	4-0	40		100	.	I			.													.				*	73					.
XDMP1	XRAY DIAG MAMMO PROCESS	SV	GLG	AT1	3000	1200	35	40	5	500	C	.	.	U	.	.	.	.	.	.	.	.	.	.	.	.	.	-	10	2.5	*	23	.	14	.	Y	M
		VT	GPT	GPT	VAR	4-0	40		100	.	.			.													.				*	73					.
XDR01	XRAY, RADIOGRAPHIC, GENERAL	VT	GLG	AT1	3000	1200	35	40	5	500	D	.	.	U	.	.	.	.	.	.	.	.	.	.	.	.	.	0	6	2	*	23	.	14	.	.	.
		SV	GPT	GPT	10-0	4-0	40		100	.	I			.													.				*	73					.
XDRF1	XRAY DIAG RAD/FLUORO	VT	GLG	AT1	3000	1200	35	40	5	500	D	.	.	U	.	.	.	.	.	.	.	.	.	.	.	.	.	0	6	2	*	23	.	14	.	.	.
		SV	GPT	GPT	10-0	4-0	40		100	.	I			.													.				*	73					.
XDUS1	ULTRASOUND	VT	GPT	AT1	VAR	1200	35	40	5	500	D	.	.	U	.	.	.	.	1	.	.	.	1	.	.	.	.	0	6	2	*	23	.	14	.	.	.
		SV	GLG	.	VAR	4-0	40		100	.	I			.													.				*	73					.
XFDS1*	XRAY FILE, DIGITAL STORAGE	VT	GPT	AT1	2400	900	35	40	5	300	.	.	.	U	.	.	.	.	.	.	.	.	.	.	.	.	.	+	6	1	*	20	.	.	.	.	N
		.	.	.	8'-0"	3'-0"	40		100	.	.			.													.				*	68					.
XFFA1	XRAY FILM FILES AREA - FIXED SHELVES	VT	GPT	AT1	VAR	900	35	40	12	300	.	.	.	.	.	.	.	.	.	.	.	.	.	.	.	.	.	0	4	2	*	20	.	.	.	.	.
		.	.	.	VAR	3-0	40		250	.	.			.													.				*	68					.
XFFA2	XRAY FILM FILES AREA - MOBILE SHELVES	VT	GPT	AT1	VAR	900	35	40	17	300	.	.	.	.	.	.	.	.	.	.	.	.	.	.	.	.	.	0	4	2	*	20	.	.	.	.	.
		.	.	.	VAR	3-0	40		350	.	.			.													.				*	68					.
XFP01	XRAY FILM PROCESSING DARKROOM - 1 PROCESSOR	VT	GLG	GLG	2400	L	35	45	5	200	G	.	.	U	.	.	.	.	.	.	.	.	.	.	.	.	.	-	10	2.5	*	20	.	14	.	Y	M
		SV	GPT	.	8-0	.	40		100	.	.			.													.				*	68					.
XFP02	XRAY FILM PROCESSING DARKROOM - 2 PROCESSORS	VT	GLG	GLG	2400	900	35	45	5	200	G	.	.	U	.	.	.	.	.	.	.	.	.	.	.	.	.	-	10	2.5	*	20	.	14	.	Y	M
		SV	GPT	.	8-0	3-0	40		100	.	.			.													.				*	68					.
XFP03*	XRAY FILM PROCESSING DAYLIGHT	VT	GPT	AT1	2400	900	35	45	5	500	.	.	.	U	.	.	.	.	.	.	.	.	.	.	.	.	.	-	10	2.5	*	20	.	14	.	Y	M
		SV	.	.	8'-0"	3'-0"	40		100	.	.			.													.				*	68					.

Room Code	Room Name	ARCHITECTURAL MATRL+FIN FL	WL	CLG	CLG HT	DOOR SIZE	NOISE RM	SC	STRUCTURAL FLR LOAD	ELECTRICAL LIGHT LEV	N	ES PWR PWR	LT	N	MEDICAL GASES MCA	DCA	LA	PA	MV	DHV	DLV	LDE	OX	NO	NI	WAGD	N	HVAC BL	AC	OA	TEMP SM	WN	RH	FL IN	F	EX	N
XFSA1	XRAY FILM SORTING AREA	VT	GLG	AT1	2400	900	35	40	5	500	.	.	.	.	.	.	.	.	.	.	.	.	.	.	.	.	.	-	10	2.5	24	20	.	.	.	Y	M
		SV	GPT	.	8-0	3-0	40		100	.	.			.												.					75	68					.
XMRC1	XRAY MAGNETIC RESONANCE CONTROL ROOM	VT	GLG	AT1	2400	900	35	40	5	300	A	.	.	.	.	.	.	.	.	.	.	.	.	.	.	.	.	0	4	2	*	20	.	.	.	.	.
		SV	GPT	.	8-0	3-0	40		100	.	.			.												.					*	68					.
XMRC2	XRAY MAGNETIC RESONANCE SYSTEM COMPONENT ROOM	VT	GLG	AT1	2400	900	35	40	5	300	.	.	.	.	.	.	.	.	.	.	.	.	.	.	.	.	.	0	4	2	*	20	.	.	.	.	N
		SV	GPT	.	8-0	3-0	40		100	.	.			.												.					*	68					.
XMRE1	XRAY MAGNETIC RESONANCE EQUIP ROOM	VT	GLG	AT1	2400	900	35	40	5	300	.	.	.	.	.	.	.	.	.	.	.	.	.	.	.	.	.	0	4	2	*	20	.	.	.	.	.
		SV	GPT	.	8-0	3-0	40		100	.	.			.												.					*	68					.
XMRS1	XRAY MAGNETIC RESONANCE SCANNER	VT	GLG	AT1	VAR	1200	35	40	C	300	C	.	.	.	1	.	.	.	1	.	.	.	1	.	.	.	.	0	4	2	*	23	.	14	.	.	.
		SV	GPT	.	VAR	4-0	40		C	.	I			.												.					*	73					.
XMRV1	XRAY MAGNETIC RESONANCE VIEWING RM	VT	GLG	AT1	2400	900	35	40	5	300	.	.	.	.	.	.	.	.	.	.	.	.	.	.	.	.	.	0	4	2	*	20	.	.	.	.	.
		SV	GPT	.	8-0	3-0	40		100	.	.			.												.					*	68					.
XRM01	XRAY MOBILE RAD UNIT ALCOVE	VT	GVF	AT1	2400	OPEN	35	40	5	150	.	.	.	E	.	.	.	.	.	.	.	.	.	.	.	.	.	0	.	.	.	.	.	.	.	.	.
		SV	GPT	.	8-0	OPEN	40		100	.	.			.												.					.	.					.
XRM02	XRAY MOBILE C-ARM STORAGE	VT	GPT	AT1	2700	900	35	40	5	150	.	.	.	.	.	.	.	.	.	.	.	.	.	.	.	.	.	0	4	2	*	20	.	.	.	.	.
		SV	GLG	.	9-0	3-0	40		100	.	.			.												.					*	68					.
XTBT1*	BRACHYTHERAPY ROOM	VT	GLG	AT1	VAR	900	35	40	5	700	A	.	LB	U	1	.	.	.	1	.	.	.	1	.	.	.	.	+	6	2	*	23	.	14	.	Y	.
		SV	GPT	.	VAR	3'-0"	40		100	.	C			.												.					*	70					.
XTEM1	XRAY THERAPY ENTRY MAZE - ALL UNITS	SV	GLG	AT1	3000	SP	35	40	C	200	.	.	LS	.	.	.	.	.	.	.	.	.	.	.	.	.	.	0	6	2	*	20	.	.	.	.	.
		VT	GPT	.	10-0	.	40		C	.	.			.												.					*	68					.
XTLA1	XRAY THERAPY LINEAR ACCELERATOR	SV	GLG	AT1	3000	1200	35	40	C	500	D	.	LB	.	.	.	.	.	1	.	.	.	1	.	.	.	.	0	6	2	*	23	.	14	.	Y	.
		VT	GPT	.	10-0	4-0	40		C	.	I			.												.					*	73					.
XTLA2	XRAY THERAPY LINEAR ACCEL HIGH VOLT	SV	GLG	AT1	3000	1200	35	40	C	500	D	.	LB	.	.	.	.	.	1	.	.	.	1	.	.	.	.	0	6	2	*	23	.	14	.	Y	.
		VT	GPT	.	10-0	4-0	40		.	.	I			.												.					*	73					.
XTLA3	XRAY THERAPY LINEAR ACCEL DUAL VOLT	SV	GLG	AT1	3000	1200	35	40	C	500	D	.	LB	.	.	.	.	.	1	.	.	.	1	.	.	.	.	0	6	2	*	23	.	14	.	Y	.
		VT	GPT	.	10-0	4-0	40		.	.	I			.												.					*	73					.

APPENDIX A

ARCHITECTURAL AND ENGINEERING DESIGN REQUIREMENTS

Room Code	Room Name	ARCHITECTURAL MATRL+FIN FL	WL	CLG	CLG HT	DOOR SIZE	NOISE RM	SC	STRUCTURAL FLR LOAD	ELECTRICAL LIGHT LEV	N	ES PWR PWR	LT	N	MEDICAL GASES MCA	DCA	LA	PA	MV	DHV	DLV	LDE	OX	NO	NI	WAGD	N	HVAC BL	AC	OA	TEMP SM	WN	RH	FL IN	F	EX	N
XTLB1	XRAY THERAPY PHYSICS LABORATORY	SV	GLG	AT1	2700	900	35	40	5	500	C	.	.	.	.	.	.	.	.	.	.	.	.	.	.	.	.	-	6	2	*	21	.	.	.	.	.
		VT	GPT	.	9-0	3-0	40		100	1100	.			.													.				*	70					.
XTLC1	XRAY THERAPY LINEAR ACCEL CONTROL	SV	GLG	AT1	2400	900	35	40	5	300	A	.	.	.	.	.	.	.	.	.	.	.	.	.	.	.	.	0	6	2	*	20	.	.	.	.	.
		VT	GPT	.	8-0	3-0	40		100	.	.			.													.				*	68					.
XTLE1*	LINEAR ACCELORATOR SYSTEM COMPONENT RM	SV	GLG	AT1	VAR	900	35	40	5	500	A	.	LB	U	.	.	.	.	.	.	.	.	.	.	.	.	.	0	4	2	*	20	.	14	.	.	N
		VT	GPT	.	VAR	3'-0"	40		100	.	C			.													.				*	68					.
XTMF1	XRAY THERAPY MOLD FABRICATION SHOP	SV	GLG	AT1	2700	900	35	40	5	500	.	.	.	.	.	.	.	.	.	.	.	.	.	.	.	.	.	-	6	2	*	20	.	.	.	Y	.
		VT	GPT	.	9-0	3-0	40		100	.	.			.													.				*	68					M
XTRT1	XRAY THERAPY RADIUM TX STORAGE/PREP	SV	GLG	AT1	2400	900	35	40	5	500	C	.	.	.	.	.	.	.	.	.	.	.	.	.	.	.	.	-	6	2	*	20	.	13	.	Y	.
		VT	GPT	.	8-0	3-0	40		100	1100	.			.													.				*	68					M
XTSC1	XRAY THERAPY, SIMULATOR CONTROL ROOM	VT	GLG	AT1	2400	900	35	40	5	300	A	.	LB	.	.	.	.	.	.	.	.	.	.	.	.	.	.	0	6	2	*	20	.	.	.	.	.
		SV	GPT	.	8-0	3-0	40		100	.	.			.													.				*	68					.
XTSG1	XRAY THERAPY SIMULATOR GANTRY ROOM	SV	GLG	AT1	3000	1200	35	40	5	300	.	.	.	.	.	.	.	.	1	.	.	.	1	.	.	.	.	0	6	2	*	21	.	.	.	.	.
		VT	GPT	.	10-0	4-0	40		100	.	.			.													.				*	70					.
XTTP1	XRAY THERAPY TREATMENT PLANNING RM	VT	GLG	AT1	2400	900	35	40	5	500	.	.	.	.	.	.	.	.	.	.	.	.	.	.	.	.	.	0	6	2	*	21	.	.	.	.	.
		SV	GPT	.	8-0	3-0	40		100	.	.			.													.				*	70					.
XVC01	XRAY VIEWING/CONSULTATION AREA	VT	GPT	AT1	2400	900	30	40	3	300	.	.	.	.	.	.	.	.	.	.	.	.	.	.	.	.	.	0	4	1	*	20	.	.	.	.	.
		SV	GLG	.	8-0	3-0	35		60	.	.			.													.				*	68					.

UFC 4-510-01

APPENDIX B

DESIGN SUBMITTALS AND DOCUMENTATION FOR DBB ACQUISITION PROCESS

B-1 **BLOCK PLAN SUBMITTAL (S-1)**. Block Plans shall include selected design solution. The Design Agent's Medical Facilities Design Office/Center, shall develop the specific submittal requirements to define the S-1 level of design effort. TMA/PPMD does not review this document.

B-1.1 For selected site plans of each scheme show existing and proposed structures, topography, utilities, roads, and parking.

B-1.2 For selected floor plans for each scheme show each level with circulation patterns and principal dimensions. On addition/alteration projects, existing versus new conditions must be clearly delineated.

B-2 **SCHEMATIC DESIGN SUBMITTAL (S-2)**. This submittal includes development of the room-by-room floor plans, building elevations, and initial analysis of the major architectural and engineering systems based on the selected (or composite) block plan. The primary purpose of this submittal and review is to identify and resolve all major space program deficiencies at an early stage in design, develop the massing and aesthetics of the facility, and "fix" the scope of the building. Requests for scope overages with justification should be submitted at this time. PPMD will provide review comments, within 14 days of submittal. The following are the minimum requirements for S-2:

B-2.1 Executive Summary of the following:

- Block Plan selected and rationale for the selected scheme.
- Summary of the narrative describing various proposed architectural and engineering aspects of the projects.

B-2.2 Site plans showing building location, future expansion, and existing and proposed structures, topography, utilities, roads and parking.

B-2.3 Floor plans for each floor showing all programmed spaces, corridors, structural grid system (including columns), electrical and mechanical equipment rooms, and stairs/elevators/escalators to meet the functional requirements. All spaces must be labeled with the room name, the room code from the PPMD Program For Design (PFD), and the programmed and designed net areas. For addition/alteration projects, preliminary demolition drawings, with photographs to depict conditions are required. Separate circulation plans may be required by the design agent and/or the using service. MEP room space design shall be based on preliminary estimates of equipment capacity and building demand.

B-2.4 Plans showing major circulation paths in and around the facility, as directed by the Agent, for complex projects.

B-2.5 Exterior elevations and major building sections appropriate to the level of Concept Design development. To assure Post or Base compatibility, observe and document the physical features of the site and the character/style of any surrounding building(s).

B-2.6 A separate plan of the Chemical Biological Radiological Nuclear Explosion (CBRNE) protected area, if programmed, showing how the spaces would functionally operate.

B-2.7 Plans showing single line drawings of the distribution systems of major mechanical, electrical/communications, and plumbing (MEP) from the MEP rooms to the areas served as required by the design agent and/or the using service.

B-2.8 A comprehensive narrative describing various proposed architectural and engineering aspects of the projects as follows:

B-2.8.1 Civil Design Narrative. Refine the S-I site investigation report and utilities reports.

B-2.8.2 **Architectural Design Narrative**. Address the overall architectural concept including: Exterior wall systems and finish materials being considered, acoustics, base architectural plan, floor-to-floor heights, proposed roofing materials, slope(s), styles, energy conservation features, sustainable design, commissioning, life safety, and fire protection features, and Uniform Federal Accessibility Standards (UFAS) compliance ;

B-2.8.3 **Structural Design Narrative**. Narrative justification, describing the basis for system selection, along with drawings of the selected structural system adequately developed so that no additional major engineering decisions are required, shall be provided.

B-2.8.4 **Seismic Design Narrative**. Summarize the seismic design considerations including “S” values and the level of protection required. Discuss post-earthquake operation requirements;

B-2.8.5 **Heating, Ventilation, and Air Conditioning (HVAC) Design Narrative**. Discuss design considerations and space requirements for the primary and secondary HVAC systems being considered. Provide a written description of the anticipated smoke control system, passive or active.

B-2.8.6 **Plumbing Design Narrative**. Discuss design considerations and space requirements for the various plumbing systems, including domestic hot and cold water, fuel gas, medical gases, sanitary waste, acid waste, and storm drains. Discuss water supply, quality, required storage, and distribution systems. Discuss hot water generation, storage, temperatures, and distribution systems. Address various types of medical gases, storage, and distribution systems.

B-2.8.7 **Electrical Design Narrative**. Discuss design considerations and space requirements for electrical systems. Address the following: voltage, routing, and

reliability of primary services; connected and demand load; normal and essential electrical system; emergency power; lighting systems; and energy conservation features;

B-2.8.8 **Communication Design Narrative**. Discuss design considerations and space requirements for the following: telephone, intercom, dictation, paging, public address, televisions, nurse call, Comprehensive Healthcare [Computer] Systems (CHCS), data communication, and security systems; uninterruptible power supply (UPS);

B-2.8.9 **Fire Protection Design Narrative**. Address the following: type of construction, fire rating of materials, occupancy classification, fire detection, alarm, and suppression systems. Provide a summary of the latest Fire Safety Evaluation System Study for addition/alteration projects;

B-2.8.10 If an Engineered Smoke Control System (ESCS) is planned, provide an economic justification;

B-2.8.11 **Construction Phasing Narrative**. For addition/alteration projects, provide a narrative description of the proposed Construction Phasing to evaluate the continued/uninterrupted operation of the existing facility during construction and the associated impact on the construction cost. Identify requirements for temporary buildings to serve as swing space during the construction and the cost associated with these buildings; and

B-2.8.12 **Antiterrorism Force Protection Narrative**. Discuss siting and design considerations, and any space requirements for antiterrorism force protection systems. Include confirmation of installation's approval.

B-2.9 Gross area tabulation of floor area, along with a small scale, single-line, dimensioned key plan, to reflect the total space required in Figure 2-2 format.

B-2.10 Net area tabulations.

B-2.11 A net-to-gross area conversion summary comparing the as-designed condition with the applicable net-to-gross square feet allowances.

B-2.12 Updated cost estimate.

B-2.13 The narrative portion of the S-2 submittal, calculations, and cost estimate shall comply with paragraph B-4.1.

B-3 **CONCEPT DESIGN SUBMITTAL (S-3)**. This submittal is about 30 percent of the total design effort in all disciplines and includes further development of PPMD-approved S-2 submittal. The purpose of this submittal is to finalize all major design/engineering decisions and to validate project scope and cost. PPMD does not normally review this submittal; however, if the design is developed well enough, it may be submitted to PPMD as the S-4. The following are minimum requirements for this submission:

B-3.1 An update of all requirements in the S-2 Submission.

B-3.2 Plans showing design in sufficient detail to allow for an in-depth review and a reliable cost estimate. As a minimum, provide the following:

B-3.2.1 Site plans showing building location, future expansion, existing and proposed structures, topography, utilities, roads, parking, and landscaping;

B-3.2.2 Floor plans for each floor showing all programmed spaces, corridors, structural grid system (including columns), electrical/communications/mechanical equipment rooms, and stairs/elevators/escalators to meet the functional requirements. All spaces must be labeled with the room name, the room code from the PPMD program for design, and the programmed and designed net areas;

B-3.2.3 All exterior elevations and major building sections;

B-3.2.4 Reflected ceiling plans showing ceiling grid and light fixture placement;

B-3.2.5 Equipment plans showing all Categories A, B, C, D, E, F, and G equipment. Show Category A, B, and E equipment on the equipment drawings and floor plans with solid lines and Category C and F equipment with dashed lines. (Provide Joint Schedule Numbers (JSN) as indicated in the Medical Facility Room Contents List (MFRCL) for all applicable logistical categories.)

B-3.2.6 HVAC plans showing layout of mechanical rooms with all major equipment and one line drawing of distribution systems. Distribution mains shall be dimensioned;

B-3.2.7 Plumbing plans showing plumbing, medical air, vacuum, and medical gas equipment and major distribution lines. Water supply and gravity drainage mains shall be dimensioned.

B-3.2.8 Electrical plans showing electrical room layouts, light fixture locations, receptacle locations, motor controls, and locations of panelboards and distribution equipment. Provide single line diagrams of the normal/essential electrical systems, emergency power, and UPS;

B-3.2.9 Communication plans showing location of communication equipment and devices. Show layout of communication closets and provide single line diagram for each system;

B-3.2.10 Fire protection and life safety plans showing sprinklered areas, fire rated walls and doors, smoke compartmentation, fire pumps, stand pipes, fire extinguisher cabinets, fire alarm, and fire exits. Show the occupancy classifications and maximum travel distances to smoke and fire barriers.

B-3.2.11 For addition/alteration projects, preliminary demolition drawings indicating the removal of structural, architectural, mechanical/electrical/communications systems,

asbestos and hazardous materials.

B-3.3 A comprehensive narrative describing various architectural and engineering systems being considered:

B-3.3.1 **Civil Design Narrative**. Include the site investigation and utilities reports based on further refinement of the S-2 requirements. Summarize the civil design parameters, parking, and the major features of the design;

B-3.3.2 **Architectural Design Narrative**. Address the overall architectural concept including: interior (in accordance with Appendix A) and exterior finish materials wall systems, roofing systems, acoustics, base architectural plan, floor-to-floor heights, contingency and mobilization features, energy conservation features, sustainable design, LEED Checklist, commissioning , UFAS features;

B-3.3.3 **Structural Design Narrative**. Address the selected structural foundation and framing systems considered and provide economic basis for system selection. Summarize the structural design parameters and the major features of the design;

B-3.3.4 **Seismic Design Narrative**. Summarize the seismic design considerations including “S” values and the level of protection required. Discuss post-earthquake operation requirements;

B-3.3.5 **Heating, Ventilation, and Air Conditioning (HVAC) Design Narrative**. Provide a summary of the primary and secondary HVAC systems considered and the economic basis for system selection. Summarize the proposed control systems, fire protection features, and the energy conservation features being considered.;

B-3.3.6 **Plumbing Design Narrative**. Describe the various plumbing systems, including domestic hot and cold water, fuel gas, medical gases, sanitary waste, acid waste, and storm drains. Discuss water supply, quality, required storage, and distribution systems. Discuss hot water generation, storage, temperatures, and distribution systems. Address various types of medical gases, storage, and distribution systems;

B-3.3.7 **Electrical Design Narrative**. Summarize the electrical design parameters and the major features of the design. Address the following: voltage, routing, and reliability of primary services; connected and demand load; normal/essential/emergency electrical system; lighting systems; and energy conservation features;

B-3.3.8 **Communication Design Narrative**. Summarize the communication systems design parameters and the major features of the design. Discuss the following: telephone, intercom, dictation, paging, public address, television, nurse call, CHCS, data communication, and security systems;

B-3.3.9 **Fire Protection Design Narrative**. Summarize the fire protection systems design parameters and the major features of the design. Address the

following: type of construction, fire rating of materials, life safety features, occupancy classification, fire detection, alarm, and suppression systems. Provide a summary of the latest Fire Safety Evaluation System Study for addition/alteration projects;

B-3.3.10 **Interstitial Building System Narrative**. If an Interstitial Building System was approved at S-2, update the design parameters and the major features of the design;

B-3.3.11 **Engineered Smoke Control System (ESCS) Narrative**. If an ESCS was approved at S-2, provide a summary of the ESCS design parameters and the major features of the design;

B-3.3.12 **Energy Conscious Design Narrative**. Discuss all energy conscious design considerations implemented and considered for the design. Confirm energy budget compliance;

B-3.3.13 **Waste Handling Systems Narrative** (when applicable). Summarize the waste handling systems design parameters and the major features of the design. Address trash removal; hazardous, infectious, and biological waste; retort sterilizers; incinerators; and other waste handling features of the design;

B-3.3.14 **Security Systems Narrative**. Summarize the security systems design parameters and the major features of the design; and

B-3.3.15 **Antiterrorism Force Protection Narrative**. Summarize the antiterrorism force protection system design parameters and the major features of the design.

B-3.4 **Detailed Cost Estimate**.

B-3.5 An updated DD Form 1391 reflecting the reviewed cost estimate, any changes to the project description, and justification.

B-3.6 Gross area tabulation of floor area, along with small scale, single-line, dimensioned drawings, to reflect the total space required in Figure 2-2 format.

B-3.7 Update of S-2 net area tabulations.

B-3.8 Outline specifications showing basic intent.

B-3.9 Room finishes schedule keyed to the plans by room number and name. Include proposed Structural Interior Design (SID) color scheme/selections, see paragraph 4.14. Provide color boards with samples of major finishes or pictures there of.

B-3.10 Equipment list showing all category A, B, C, D, E, F and G equipment for each room keyed to the plans by room number and name. Provide equipment data sheets for all equipment that requires utility connections. The AE must develop the initial equipment list into a viable room-by-room listing. Coordinate substitutions or

changes with the using Military Department. The type, quantity, and location of biological, radioisotope, fume, canopy, and laminar air hoods shall also be indicated in the equipment list. Provide an appropriate catalog cut sheet(s) for all items of equipment having a logistical category code of A, B, E, or F and any C and G items having unique utility requirements, structural support, or space requirements.

B-3.11 A sketch perspective drawing depicting the proposed structure as directed by the design agent and/or the using service. This sketch will be the basis for the subsequent rendering requirement.

B-3.12 The narrative portion of the submittal, calculations, and cost estimate shall be packaged in standard U.S. 3-ring binders with labeled subject dividers, sequential page numbers, and table of contents.

B-4 **35 PERCENT DESIGN SUBMITTAL (S-4)**. This submittal is as a minimum 35 percent of the total design effort in all disciplines and includes a corrected and refined S-3 package based on the S-3 review. This is considered the “technical submission”. The reviewed S-4 will be submitted to PPMD by the Design Agent and the using Military Department. A-E participation may be required on large or complex projects. Final scope and PA (cost) shall be determined with this submission. The minimum requirements of this submission are the same as described for S-3. Provide load, demand, equipment sizing, energy consumption, life cycle cost, life safety, and other calculations for all building systems and features as applicable, according to requirements in the text of this document, and the Design Agent's Medical Facilities Design Office/Center standards.

B-4.1 The narrative portion of the submittal, calculations, and cost estimate shall be packaged in standard U.S. 3-ring binders with labeled subject dividers, sequential page numbers, and table of contents. Drawings shall be at a minimum 1:100 SI (1/8 inch scale); however 1:50 SI (1/4 inch) scale may be necessary for clarity on equipment plans, mechanical and electrical equipment room layouts, complex rooms or departments, interior elevations. Half-size drawings will be provided as stipulated in the distribution schedule.

B-4.2 **Rendering**. A final rendering is prepared after 35 Percent Design Submission approval. A color photograph of the original rendering, approximately 500 mm X 400 mm (20 x 16 inch) in a 700 mm X 500 mm (28 x 20 inch) brushed aluminum frame shall be sent to TMA/PPMD. The photograph is to reflect the 35 percent review comments and be titled, matted, framed, and glazed with nonglare tempered glass or plexiglas. Other photographs are to be distributed as scheduled by the Design Agent.

B-5 **COMPREHENSIVE INTERIOR DESIGN (CID)**. The final design phase, at option of using Military Department, may include a Comprehensive Interior Design (CID) effort for furniture and accessory selection, layout and identification, and documentation for procurement. The Comprehensive Interior Design (CID) package is to be coordinated with the interior finishes and colors Structural Interior Design (SID) early in the final design phase so that the first submittal of the CID will be fully coordinated with the building design after S-4. Subsequent selections of furnishings and medical

equipment are to be coordinated with the CID. See Glossary, para 4.14, and para 4.17 for expanded definitions of CID and SID.

B-6 **65 Percent Submittal (S-5)**. The Design Agent's Medical Facilities Design Office/Center, shall develop the specific submittal requirements to define the S-5 level of design effort.

B-6.1 **Comprehensive Fire Protection Design**. All fire protection provisions shall be summarized and submitted as a separate plan supported by a fire protection design analysis, including fire protection drawings developed during the Concept phase of the design. The fire protection study shall include related design considerations and criteria that have been coordinated among all the affected disciplines and shall serve as the basis for the design, construction, and future operation of the building. If required by the Design Agent, a completed Statement of Construction will be provided at the completion of construction by the contractor.

B-6.2 **Equipment Specifications**. The AE shall develop specifications for all equipment that does not have current guide specifications. Update the specifications to permit procurement of the latest model of equipment. Develop the specifications to accommodate at least three reputable vendors of the same type equipment when practicable. Coordinate problem items with the using Military Department. Include the scope of services to be provided by mechanical and electrical contractors for installing government furnished equipment. The Joint Schedule Numbers (JSN) or the National Stock Numbers (NSN), within the MIL-STD 1691, shall not be used as substitutes for contract specifications and detail drawings.

B-7 **100 Percent/Final Submittal (S-6)**. The Design Agent's Medical Facilities Design Office/Center, shall develop the specific submittal requirements to define the S-6 level of design effort. When the design is complete, the Design Agent will submit a copy of the final documents (i.e. drawings, specification, cost estimate, instructions to bidders, etc.) to PPMD. Along with this package, the Design Agent shall provide a memorandum to PPMD certifying that the design has been completed and that all technical requirements and cost criteria approved at the 35 Percent Design stage have been incorporated into the Final Design.

APPENDIX C

UNIVERSAL X-RAY ROOM

C-1 **DEFINITION OF UNIVERSAL X-RAY ROOM**. "The universal X-ray room shall be capable of accepting all routine radiographic, fluoroscopic, and tomographic equipment, up to 1200 ma, 150 kvp, regardless of manufacture, during initial installation and subsequent replacement actions with little, if any, facility modification. The procedures shall be performed unencumbered and without any restriction of system components, patient size, or any known procedure that any installed X-ray equipment can perform now or in the future." There may be additional requirements for specialty rooms such as digital radiography, special procedure rooms, C-arms, or angiography rooms.

C-2 **CRITERIA**.

C-2.1 **Planning and Programming**. The universal room shall be a maximum of 30 net m^2 (320 net square feet) including space for equipment, control booth, and circulation. Critical room dimensions and layouts are given in Figure C-1. However, all dimensions should be verified with actual equipment to be purchased. Utilities distribution methods may be modified for use in projects utilizing IBS concepts when implemented (see Appendix E).

C-2.2 **Electrical Raceway System**. An extensive raceway system is provided so the universal room will accept any manufacturer's equipment without additional raceways, facility modifications, or use of exposed wiring. The raceway system consists of trench floor ducts, lay-in wall ducts, and ceiling cable trays as shown on Figure C-1 and C-2.

C-2.2.1 Floor ducts are bottom-type trench duct, with nominal 90 mm (3.5 in.) by 300 mm (12 in.) 250 mm (10-inch) tub with a 300 mm (12-inch) wide, 8 mm (1/4-inch) thick steel cover plate. Cover plate must be installed flush with and have the same tile insert as the floor. Provide a gasket on the cover plate to maintain water tightness.

C-2.2.2 Wall ducts are nominal 10 mm (3.5 in.) by 250 mm (10 in.) with 300 mm (12-inch) wide flush mounted cover plates finished to match the walls. Wall duct must be UL listed for enclosure of wiring to x-ray machines (reference C-a).

C-2.2.3 Ceiling cable tray**s** are nominal 10 mm (3.6 in.) by 300 mm (12 in.) 80 mm (3-inch) load depth NEMA Class 12A ladder type installed above the finished ceiling. Wall duct, nominal 10 mm (3.5 in.) by 250 mm (10 inch), may be used in lieu of cable trays.

C-2.2.4 Partitions must be provided in all ducts and cable trays to separate high and low voltage cables.

C-2.3 **Electrical Service Requirements**. Each universal room must have adequate power service to insure that all X-ray equipment can be installed without additional facility related electrical work. All feeder conductors will be copper.

C-2.3.1 Power Quality. The facility power system must provide the specified nominal voltage (480 V or 240 V) plus or minus 5 percent to each universal room. Special power conditioning equipment, if required, should be identified and provided with the X-ray installation.

C-2.3.2 Three-Phase Rooms. If the room will receive three-phase X-ray equipment, provide 150 amp, 480 volt, three-phase (3-wire and ground) service to the room. Provide an adjustable trip, 150 amp, 3-pole, shunt trip circuit breaker in a NEMA 1, flush mounted enclosure. Provide electrical service to the room in according to X-ray manufacturing recommendation with an adjustable shunt trip circuit breaker of 3-pole in NEMA 1, flush mounted enclosure.

C-2.3.3 Single-Phase Rooms. If the room will receive single-phase X-ray equipment, provide 150 amp, 240 volt, single-phase (3-wire and ground) service to the room. Provide an adjustable trip, 100 amp, 2-pole, shunt trip circuit breaker in a NEMA 1, flush mounted enclosure. Provide electrical service to the room in according to X-ray manufacturing recommendation with an adjustable shunt trip circuit breaker of 2-pole in NEMA 1, flush mounted enclosure.

C-2.3.4 Emergency Shutdown. Provide a large, clearly identified push-button to actuate the shunt trip circuit breakers, and disconnect all power to the X-ray machine and accessories.

C-2.3.5 120/208 Volt Auxiliary Panelboard. If required by using Military Department, provide a 120/208 volt, single-phase, 100 amp panelboard with a 50 amp shunt trip main breaker to support the single-phase loads in each room. Provide a 20-pole-space panelboard with at least two 20 amp 2-pole circuit breakers, and five 20 amp 1-pole circuit breakers. This panelboard may be served from the nearest general purpose 120/208V transformer; a dedicated stepdown transformer may be provided and fed from the 480V service in 3-phase rooms. (Calculations should be based on 180 amp maximum demand for 3-phase rooms, and 300 amp maximum demand for single-phase rooms.)

C-2.3.6 Voltage Drop and Regulation. Total voltage drop in a branch circuit and feeder conductors must not exceed 2 percent from the facility distribution transformer to the X-ray rooms. Total voltage regulation of the distribution transformer, feeder, and branch circuit conductors must not exceed 5%. For circuits which serve only one room, calculations should be based on the maximum demand current of the single X-ray generator. For circuits which serve more than one room, calculation should be based on the maximum demand current of the two largest rooms. (Calculations should be based on 180 amp maximum demand for 3-phase rooms and 300 amp maximum demand for single-phase rooms.) Maximum total voltage drop on feeder and branch circuits to the farthest outlet must not exceed 5% or in accordance to the latest NFPA 70 Edition.

C-2.3.7 Distribution Transformers. Distribution transformers should not be dedicated solely to X-ray equipment. The voltage regulation is better if X-ray machines are connected to transformers which are partially loaded with other equipment. X-ray machines should always be connected line-to-line, never line-to-neutral.

C-2.3.8 Essential Power. Essential power for X-ray equipment, illumination, and duplex receptacles shall be in accordance with the using Military Department guidance documents.

C-2.4 **Warning Lights, Interlocks, and Illumination**. Warning lights, interlocks, and illumination are to be provided in accordance with the Design Agent's guidance documents. Illumination should be in accordance with Appendix A vice Design Agent's guidance documents.

C-2.5 **Structural Requirements**.

C-2.5.1 **Walls**. Provide studs on either side of the vertical electrical raceways. Design walls to support 100 kg (220 pounds) vertical-to-horizontal pull. Double walls must be provided between adjacent x-ray rooms. Wall backing/support is required in various locations for wall bucky units and control panels.

C-2.5.2 **Ceiling Support System**. Provide an overhead tube-mount support system in accordance with Figure C-3 with a load bearing capacity of 408 kg (900 pounds) vertical point load and 23 kg (50 pounds) per square foot uniformly distributed load. Spanning members should be mounted perpendicular to the centerline of the X-ray table and positioned at 650 mm (25-5/8 inches) on center to provide 600 mm (2 feet) clear between members. The acoustical ceiling tiles are to be suspended from the structural grid. Bottom of members should be flush with the finished ceiling.

C-2.6 **Case Work**.

C-2.6.1 Case work shall be as specified by the using Military Department.

C-2.6.2 A hand sink with hot and cold water and drain will be provided.

C-2.7 **Radiology Shielding**.

C-2.7.1 As a minimum:

a) Comply with the design requirements of NCRP Report No.49 (reference C-b), and certify as advised by NCRP Report No.102 (reference C-c.) and by the using Military Department Procedures.

b) Lead shielding shall be 3 mm (1/16 inch) lead or lead equivalent up to 2100 mm (7 feet) above the finished floor. Penetrations through the shielding should be avoided.

c) Where possible, lead shielding shall be applied to exterior side of wall partitions, i.e., laminated behind gypsum board for protection.

C-2.7.2 Use of modular shielding for operator's booth is permitted.

C-2.7.3 All, grilles, registers, and diffusers shall be located at ceiling height or in ceiling. Thermostat transmission lines shall be routed to avoid penetration of shielding. Recommend we require all ductwork, grilles, registers, and diffusers to be above and/or flush with the finished, architectural ceiling vice providing a minimum height.

C-2.8 **Fire Protection**

C-2.8.1 Reference Section 12 for all Fire Protection criteria.

C-2.8.2 Automatic sprinkler protection sprinkler heads in all Radiographic rooms shall have recessed heads.

REFERENCES

C-a. Underwriters Laboratories (UL), Electrical Construction Materials Directory, (current edition).

C-b. National Council on Radiation Protection and Measurements (NCRP), Report No. 147, "Structural Shielding Design for Medical X-Ray Imaging Facilities (November 2004)." NCRP Publications, 7910 Woodmont Avenue, Suite 400, Bethesda, MD 20814.

C-c. National Council on Radiation Protection and Measurements (NCRP), Report No. 102, "Medical X-Ray, Electron Beam and Gamma-Ray Protection For Energies Up to 50 Mev (Equipment Design, Performance and Use) (1989)." NCRP Publications, 7910 Woodmont Avenue, Suite 1016, Bethesda, MD 20814.

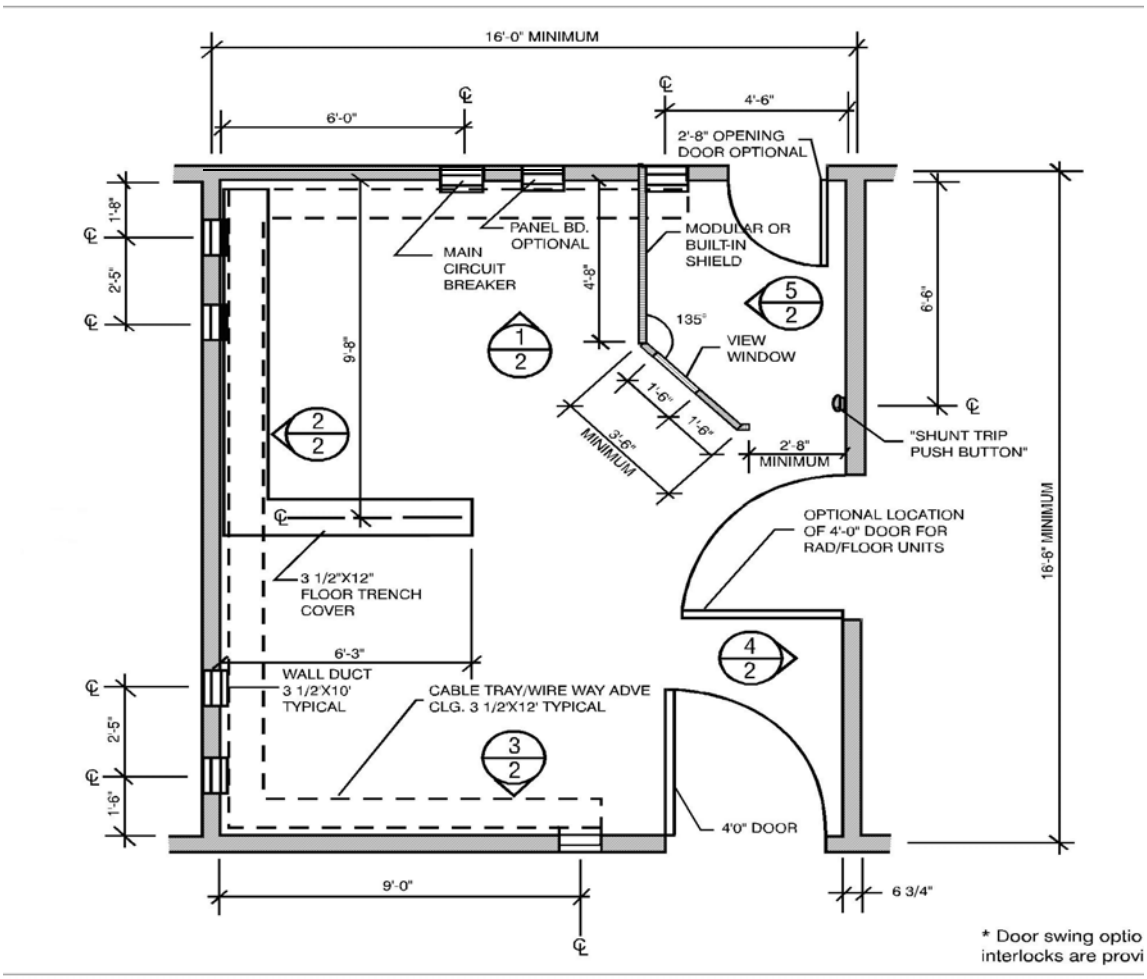
16'-0" MINIMUM
6'-0"
4'-6"
2'-8" OPENING
DOOR OPTIONAL
PANEL BD.
OPTIONAL
MAIN
CIRCUIT
BREAKER
MODULAR OR
BUILT-IN
SHIELD
4'-8"
135°
VIEW
WINDOW
1'-6"
1'-6"
3'-6"
MINIMUM
2'-8"
MINIMUM
"SHUNT TRIP
PUSH BUTTON"
6'-6"
16'-6" MINIMUM
OPTIONAL LOCATION
OF 4'-0" DOOR FOR
RAD/FLOOR UNITS
9'-8"
3 1/2"X12"
FLOOR TRENCH
COVER
6'-3"
WALL DUCT
3 1/2'X10'
TYPICAL
CABLE TRAY/WIRE WAY ADVE
CLG. 3 1/2'X12' TYPICAL
1'-8"
2'-5"
2'-5"
1'-6"
4'0" DOOR
9'-0"
6 3/4"
* Door swing optio
interlocks are provi

Figure C-1

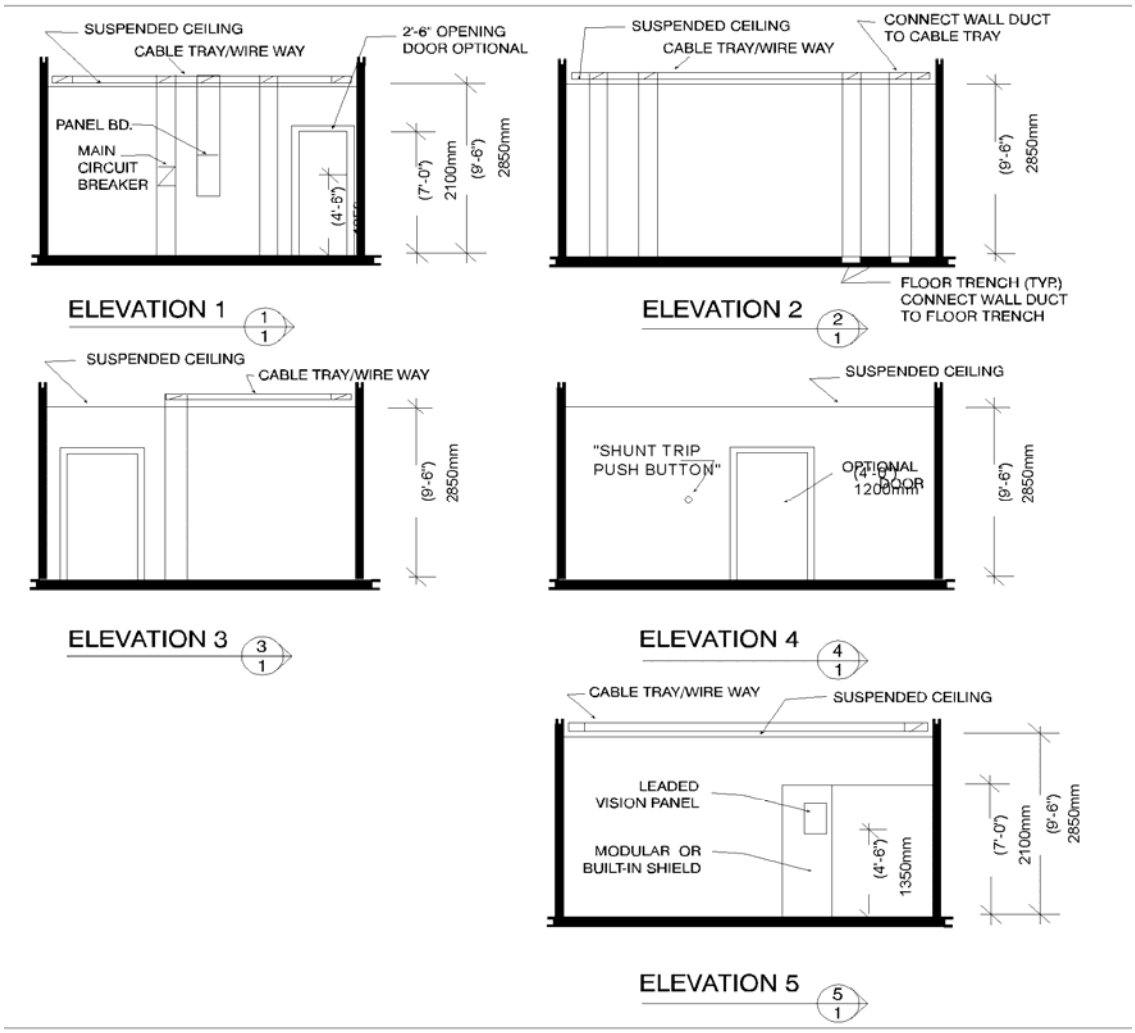
SUSPENDED CEILING
CABLE TRAY/WIRE WAY
2'-6" OPENING
DOOR OPTIONAL
PANEL BD.
MAIN
CIRCUIT
BREAKER
(4'-6")
(7'-0")
2100mm
(9'-6")
2850mm
ELEVATION 1
1
1
SUSPENDED CEILING
CABLE TRAY/WIRE WAY
CONNECT WALL DUCT
TO CABLE TRAY
(9'-6")
2850mm
FLOOR TRENCH (TYP.)
CONNECT WALL DUCT
TO FLOOR TRENCH
ELEVATION 2
2
1
SUSPENDED CEILING
CABLE TRAY/WIRE WAY
(9'-6")
2850mm
ELEVATION 3
3
1
SUSPENDED CEILING
"SHUNT TRIP
PUSH BUTTON"
OPTIONAL
DOOR
(4'-0")
1200mm
(9'-6")
2850mm
ELEVATION 4
4
1
CABLE TRAY/WIRE WAY
SUSPENDED CEILING
LEADED
VISION PANEL
MODULAR OR
BUILT-IN SHIELD
(4'-6")
1350mm
(7'-0")
2100mm
(9'-6")
2850mm
ELEVATION 5
5
1

Figure C-2

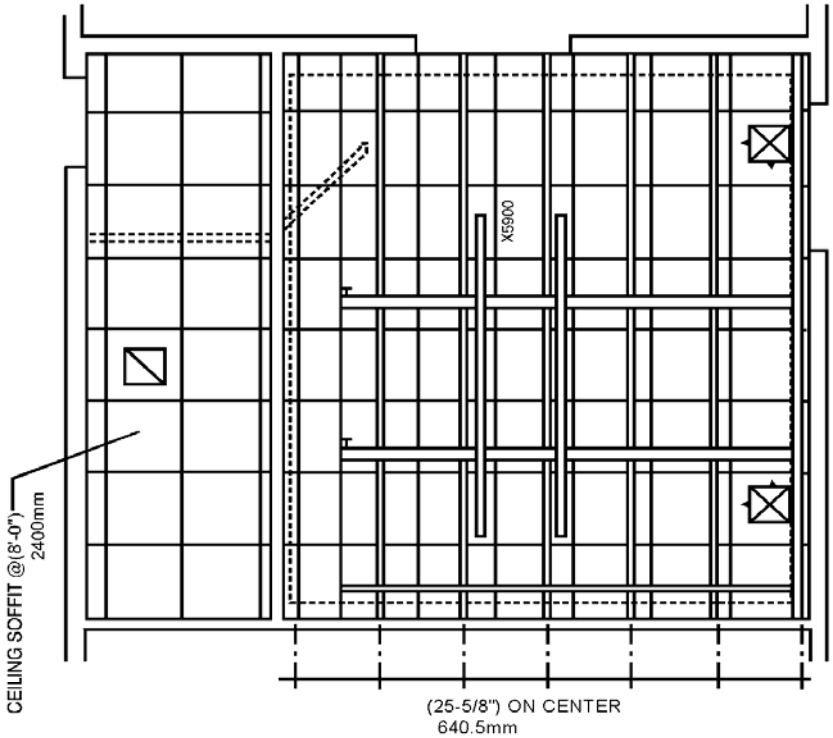

* Door swing optional i
interlocks are provided

Figure C-3

APPENDIX D

UFAS INTERPRETATIONS AND WAIVERS

D-1 This appendix provides information on written interpretations which have been issued by the Architectural and Transportation Barriers Compliance Board (ATBCB). Waivers which have been issued by ASD(FM&P) are also provided. Figure D-7 is a waiver that was issued by ASD(FM&P).

D-2 **INTERPRETATIONS**. The following information has been provided by the Architectural and Transportation Barriers Compliance Board and should be referenced in the following occupancies:

Mercantile (try-on and fitting rooms)
Health Care (x-ray or exam rooms)
Recreational (in association with showers in swimming pools, gymnasiums, etc.)
Educational (e.g. - if provided at athletic facilities or home-ec classrooms)

D-2.1 **Dressing Rooms**. In new construction, where dressing rooms are provided for use by the general public, patients, customers, or employees, all shall be located on an accessible route. In existing construction, where structural impracticability can be demonstrated, one dressing room for each sex on each accessible floor/level shall be made accessible.

D-2.1.1 **Clear Floor Space**. A clear floor space allowing a person using a wheelchair to make a 180-degree turn shall be provided in every dressing room entered through a swinging or sliding door. No door shall swing into any part of the turning space. Turning space shall not be required in a private dressing room entered through a curtained opening at least 810mm (32") wide if clear floor space complying with section "Space Allowance and Reach Ranges" renders the dressing room usable by a person using a wheelchair.

D-2.1.2 **Doors**. All doors shall be in compliance with section "Doors".

D-2.1.3 **Bench**. Every dressing room shall have a 600mm (24") (min) by 1200mm (48") (min) bench fixed to the wall along the longer dimension of the bench and not necessarily the room. The bench shall be mounted 430mm (17") to 480mm (19") above the floor and may be hinged. Clear floor spaces shall be provided alongside the bench to allow a person using a wheelchair to make a parallel transfer onto the bench. The structural strength of the bench and attachments shall comply with section "Structural Strength". Where installed in conjunction with showers, swimming pools, or other wet locations, water shall not accumulate upon the surface of the bench and the bench shall have a slip-resistant surface.

D-2.1.4 **Mirror**. A full-length mirror, measuring at least 450mm (18") wide by 1350mm (54") high, shall be mounted in a position affording a view to a person on the bench as well as to a person in a standing position.

D-2.1.5 **Rationale**. Both UFAS and MGRAD are silent regarding dressing rooms. We have many requests for information & assistance in applying existing standards but none seems to be entirely appropriate. Since usability is a requirement and since many persons using wheelchairs must dress/undress in a semi-recumbent position, the need for a bench is clearly demonstrated. Other requirements are derived from known space and reach dimensions.

(Note: This is an ATBCB proposal for insertion into UFAS based on their interpretation of minimum accessibility requirements for functional use of dressing rooms. *This proposal was adopted by the Americans with Disabilities Act Accessibility Guidelines (ADAAG). Since Section 11, "Accessibility Provisions for the Disabled" includes both UFAS and ADAAG for guidance, the above standard is applicable for application in health care facilities.*)

Figures D-1 and D-2 are provided for further information.

D-3 **PPMD QUESTIONS AND ANSWERS**. The Portfolio Planning and Management Division (PPMD) prepared a series of questions relative to UFAS and forwarded them to the ATBCB for interpretations. The numbers listed in the Reference column relate to paragraphs and pages in Fed-Std-795, "Uniform Federal Accessibility Standards." Answers to the questions are indicated in **bold** type.

REFERENCE	COMMENT/QUESTION
D.3.1 3.5, p3	A definition is needed for clear floor space. The definition should be explicit, especially with regard to wall hung items which may be allowed to overlap this space, such as a lavatory. **You may use the definitions in 4.2.4.1 and 4.2.4.2, part of which allows knee space "under some objects" to be part of clear space - under a lav this would be 29"h x 30"w x 19" max per 4.19.3.**
D.3.2 4.1.2(4),& 4.1.2(5), p5 4.3.8, p19 4.9, p27	There appears to be a contradiction between these sections. Section 4.3.8 states that stairs shall not be part of an accessible route. Sections 4.1.2(4) and 4.9 appear to indicate that stairs are a part of an accessible route if they connect levels which are not connected by an elevator, or other states requirements per section

4.1. This needs to be clarified.

This is an inconsistency in UFAS terminology which we hope will be addressed as the standard setting agencies revise UFAS. Stairs, though not accessible to a person using a wheelchair, are indeed usable by people with certain disabilities and in some instances, are preferred over a ramp. It is my personal opinion that the UFAS provisions are so helpful they should be applied to all stairs in newly constructed buildings and facilities.

D.3.3 4.1.4(9)(b), p10

This states that all common use toilet facilities shall be accessible. If an accessible toilet room is placed at the entry to a public toilet, does this satisfy this requirement even though the remainder of the toilet is not accessible? See example plan in Figure D-3.

The example plan does not meet the requirements for new construction, however, in some alterations the proposed arrangement may be regarded as fulfilling the requirements.

D.3.4 4.1.4(9)(b), p10

This section requires 10% of patient bedrooms and toilets to be accessible to the handicapped. Many general hospitals have several types of wards or bed categories (i.e., ICU, Pediatrics, OB-GYN and Isolation). Does this section require a minimum of 10% of each category of bed to be accessible to the handicapped?

Yes

D.3.5 4.2.3, p14

In health care facilities, does this standard require the referenced wheelchair turning space in any functional space other than toilets

(4.22.3), bathrooms (4.23.3), and patient bedrooms (6.3(1))?

When "usability" of the room or space requires a person using a wheelchair to make a turn, the turning space is required.

D.3.6 4.10.13,p32

This section states that sound level of audible signals of elevators shall be no less than 20 decibels. Should the sound level be specified to be less than 20 decibels above the prevailing ambient noise level of the space?

This paragraph covers only the sound level of the car position indicator <u>inside</u> the car and sets the <u>minimum</u> level only without regard for the ambient noise level (which may be assumed to be dependent on the number of people in the car as well as machine sound).

(Note: This item is currently under review by the ATBCB to determine the appropriate sound level.)

D.3.7 4.13.5,p33
4.13.6
4.13.11,p36

The life safety code (NFPA 101 5-2.1.4.1) does not allow doors other than side-hinged, swinging doors to be used for egress purposes. A note needs to be placed on such illustrations stating that these doors shall be used for only rooms or spaces which are not normally occupied (i.e., storage rooms, dressing booth, or single-person toilet rooms).

You are correct regarding the LSC requirements about egress in a hospital. Nothing *in* UFAS conflicts with LSC provisions and such a caveat has no place in the legal requirements of UFAS (but it would be a useful item in an explanatory "handbook") for UFAS

is applied to many occupancy types where such doors would be permitted in occupied spaces by NFPA 101 or other building codes.

D.3.8 4.13.7,p36

Two doors in series: Is it the intent of this section to apply to "vestibules" only, where the passage through both doors is always expected?

No.

Conversely, can we assume this section is not expected to apply to a room that has two entry doors that just happen to be in line with each other?

In a room where two entry doors line up, I believe that a clear floor space 48" long (as in Fig 26) must be provided so that one door is allowed to close fully before the person must maneuver to open the opposing door.

D.3.9 4.13.7,p.36

If the answer to previous question is no, delete this question. Would an ante room to an isolation room be allowed to have two doors in line, provided the following conditions are met?

a. The approach requirements or maneuvering clearances of each door considered independent of the other door comply with Figure 25.

b. There is a clear turn-around space that complies with Figure 3 in both the ante-room and the isolation room.

D.3.10 4.13.7,p36

If two doors in series are located in walls perpendicular to each other, is a minimum clear distance of 48 inches required?
See example plans in Figure D-5.

Yes.

D.3.11 4.16.2 & 4.16.4,p38

There is a conflict between the 36" grab bar dimension and the 36" minimum dimension for lavatory placement. Is a smaller grab bar dimension permitted?

No. The drawings in Fig. 28 appear inconsistent with the technical provisions. However, nowhere in the text is a shorter grab bar deemed acceptable. Since space must be allowed to accommodate the returns and escutcheons of the 36" grab bar, we recommend a minimum space of 39" to the edge of the lav. One must recognize also that this allowable arrangement does not permit a side transfer, only a diagonal transfer to the water closet from a wheelchair.

D.3.12 4.16.6,p38

What is the maximum height allowed for a toilet paper dispenser?

Not addressed, other than the 19" minimum.

Also, is there a minimum and maximum distance from the back wall?

The maximum distance to the front edge of the dispenser is 36" (Fig 30(d)). Care must be exercised in specifying multi-roll surface mounted or projected dispensers to be mounted so as not to interfere with the use of grab bars.

D.3.13 4.19.2,p40

Recommend that 34" maximum

		dimension be shown for sink rim height on Figure 32. **Recommendation is good. We will pass this along to the standard-setting agencies for consideration in future UFAS.**
D.3.14	4.4.19.4,p40	For safety reasons in medical facilities, the water temperature to general use sinks, exam rooms, public toilets, baths, showers, treatment rooms, etc. is limited to a maximum temperature of 105 F, by DoD criteria. Is it the intent of these sections to require insulation on drains and hot water supplies when the maximum water temperature is 105 F? **Yes - because UFAS cannot regulate maintenance and operations.** In addition, what is the maximum and minimum temperature allowable for any exposed element? **Not addressed. If no hot water is supplied, insulation may be omitted.** (Note: The ATBCB has verbally stated that on lavatories, if you put an elbow directly under the drain, run the drain to the wall with a trap flat against the wall and outlet of the trap going into the wall, then insulation would not be required on the drain. Likewise, if hot and cold water supply pipes are stubbed through the wall just below the bottom of the sink and pipes go straight up to the faucet, then insulation would not be required.)
D.3.15	4.21.2, p42	Are the shower dimensions of shower 35(a) to be strictly complied with?

		Yes. Can a flexible length such as 36" to 40" for each dimension be allowed? **No. Once a person has transferred from a wheelchair to the seat, he must be able to reach the controls and grab bar without leaning forward.**
D.3.16	4.21.2, p42	Are the shower dimensions of shower 35(b) to be strictly complied with? Is a flexible width of 30" to 36" and a flexible length of 60" to 66" acceptable? **A 36" width is actually better. Figure 35(b) dimension of "60" should read "60 minimum".**
D.3.17	4.21.2, p42	Refer to Fig 35(b): Is the 36" x 60" clear space valid? Could the 60" dimension be reduced, since a sink is shown in the clear area? **No. The sink must provide knee space as specified in Figure 31 to allow use of the clear floor space.**
D.3.18	4.21.4, p42	Length of grab bar needs to be specified for control side of 36" x 36" shower. **Yes, this should be clarified. Please note that the plan and elevations indicate the grab bar continues around the corner.**
D.3.19	4.21.4, p42	Length of grab bar needs to be specified for side and control wall of 30" x 60" shower. **Yes, this should be clarified. Plan and elevations show grab bar as continuous around 3 sides so lengths would be dependent on actual size of shower.**

D.3.20 4.21.2 4.21.4, p42	Placement of shower spray unit needs to be clarified for 30" x 60" shower unit. Figure 35(b) shows spray unit along back wall at a minimum of 27" from side wall. Figure 37(b) shows spray unit on control side of wall at 18" from entry side (or 12" from back wall). Are both configurations acceptable? **Yes, we believe so.**
D.3.21 4.21.6 4.21.6, p42	Is there a required height for mounting of spray unit in "fixed" position? **It must be within the front reach range, 48" maximum.**
D.3.22 4.21.7, p43	Drawings of shower stalls in Figure 37 should be revised to delete high curbs. **We are aware of this inconsistency. (Thanks for noticing.)**
D.3.23 4.23.3, p44	If there is a shower with no curb nor any other obstructions such as shower doors, is it allowable to have a turning space or clear space of another fixture in a single use toilet overlap the shower area? See example in Figure D-6. **Figure D-6 does not include the required 36" x 60" clear floor space at the shower. If it did, there would also be sufficient clear floor space for the lav without encroaching on the shower.**
D.3.24. 4.28.3, p45	A frequency of 5 Hertz for flashing lights appears too fast. Is this value correct for the fast flashing frequency? Also, a minimum frequency should be specified. **Current research recommends**

using a clear xenon flash tube, high intensity strobe light with an intensity of 75 to 120 candela-seconds and a flash rate of 1 to 3 Hertz.

D.3.25. 4.29.3
4.29.4, p47

Is it the intent of these sections, that any stairs which are a part of any accessible path or required emergency exit shall have no tactile warning on doors or floors?

Tactile warnings are required on doors to <u>hazardous</u> areas. An exit stair is a route to safety and the door to a stair should not be marked as a hazard. The tactile warning section at stairs (even though stairs are not part of an accessible route) has been "reserved", pending further research. ANSI A117.1 does call for detectable warning at the top of stairs. Such installation would not be prohibited by UFAS and may, in the case of an open stair, actually enhance safety.

D.3.26 4.30.5, p47

Section 4.1.1(7) requires display of international symbol for parking spaces, loading zones, entrances, toilets and baths which are accessible. Are there any other sections that dictate a requirement for having signage?

Yes. 4.1.2(15). It is the intent that all signs conform to 4.30.2 and 4.30.3, while permanent identification of rooms and spaces should be tactile and mounted as specified in 4.30.4 and 4.30.6. Incised letters will no longer be permitted when standard-setting agencies revise UFAS. If signs are altered, they must comply with these provisions for new construction. "Permanent identification" includes room

numbers, exit stairs, restrooms, etc. not occupants names.

D.3.27 4.30.4, p47

Rooms in hospitals are frequently changed, and signage is often designed for flexibility. Many signage systems have only a room number which is a permanent portion of a sign. The room function and/or person's name is on an "interchangeable strip or insert plate". Are signs with raised room numbers only acceptable?

Yes.

Signs for toilets, parking spaces, etc., as required by 4.1.1(7) would be provided as completely permanent signs.

Yes.

The following comments or questions will all have UFAS Section 6, page 57 as their reference:

D.3.28

Dressing booth criteria for health care facilities needs to be developed, similar to criteria for toilet rooms. Criteria should include minimum clear space for turnaround, grab bar requirements, bench requirements, etc.

Agree.

D.3.29

Are all dressing booths at a bank of dressing rooms required to be accessible?

Yes. In new construction, they are considered to be "common use" areas.

D.3.30

Are all specimen toilets at a bank of specimen toilets required to be accessible?

Yes. In new construction, they are

considered to be "common use" areas.

D.3.31

Does this standard intend to waive accessibility requirements for specialized medical equipments and/or their installations for such equipment as follows: fume hoods; sterilizers; cart washers; incinerators; IV poles; X-ray equipment; Medi-Prep station; surgical columns; hyperbaric medicine chambers; scrub sinks; nourishment stations; vault doors; photo-processing equipment.

UFAS does not apply to equipment.

D.3.32

Is it the intent of this standard not to require full accessibility with a turnaround space in the following spaces:

flammable storage (50)
equipment Storage (50)
barium prep (70)
soiled linen (60)
clean utility rooms (60)
sterile storage (60)
lab incubation room (70)
forms storage (50)
anesthesia gas storage (50)
baggage storage (40)
trash collection (60)
acid storage (40)
plaster prep storage (50)
gas storage (40)
chemical mix/storage (30)
parts storage (80)
work rooms - nursery (50)
vaults (40)
music/paging controls (50)
scrub areas (50)
radium sealed source rm (60)
injection room (50)

(Note: The numbers in parenthesis indicate the net square footage that has been traditionally assigned to

these functions.)

Depends on actual use and whether these spaces are restricted to use by able-bodied military personnel only. It is recommended that accessibility be provided wherever possible because the use of the room or space may change over time.

D.3.34 Projection rooms are approximately 200 square feet and may be one level above the auditorium floor. Is it the intent of this standard to require an elevator for accessibility to this space, if this is the only space served?

Must be reviewed individually. If opportunity exists, accessibility should be provided. If not, perhaps the situation warrants a waiver application.

D.3.35 Computer rooms in medical facilities may be sized as small as 100 to 200 square feet. Is it the intent of this standard to require ramps and/or lifts for accessibility to this space?

Absolutely.

D.3.36 Revolving, "light-proof" doors are used for X-ray film processing spaces. Is it the intent of this standard that darkrooms are accessible spaces? If yes, must the use of revolving doors be discontinued?

In new construction, other options are available and should be selected. An existing revolving door in an existing building may have to be altered as a consequence of a 504 complaint/action.

D.3.37 Is it the intent of this standard to make control wall configurations

accessible within X-ray rooms?

In new construction, there should be little difficulty in providing accessibility to the X-ray control wall.

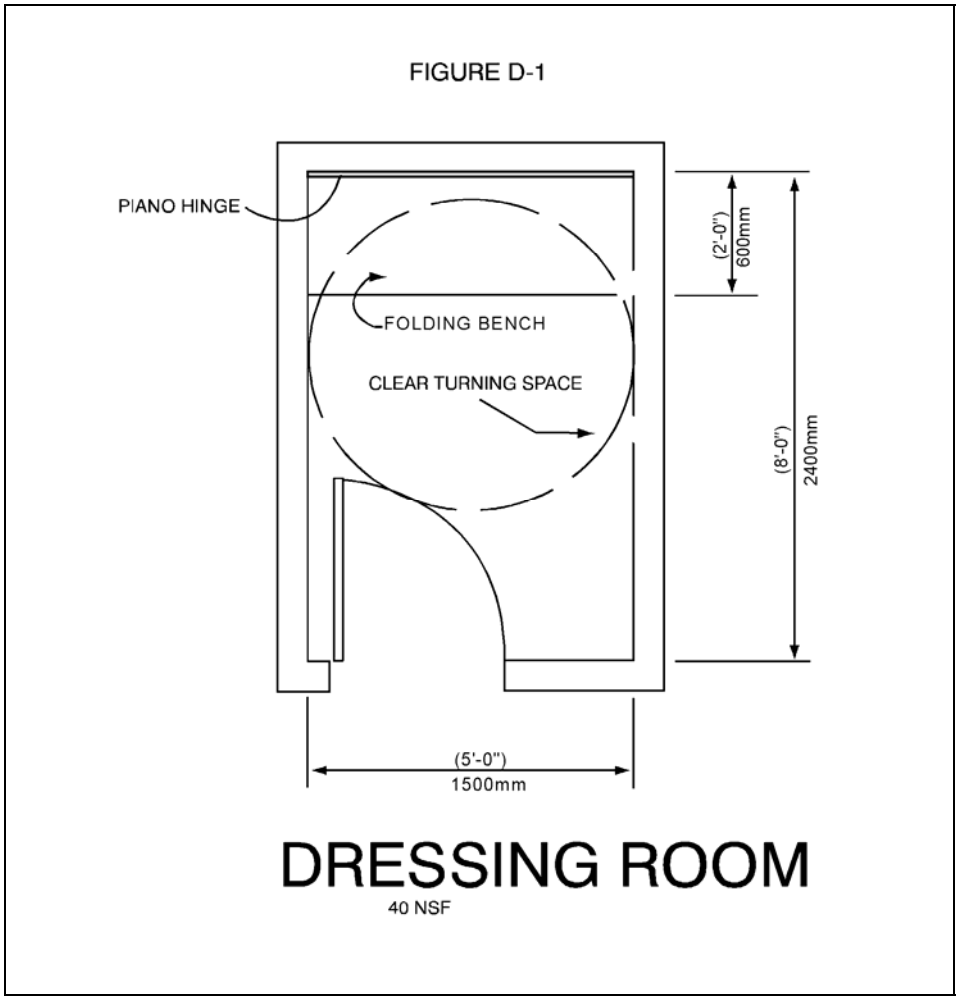
FIGURE D-1
PIANO HINGE
FOLDING BENCH
CLEAR TURNING SPACE
(2'-0")
600mm
(8'-0")
2400mm
(5'-0")
1500mm
DRESSING ROOM
40 NSF

Fligure D-1

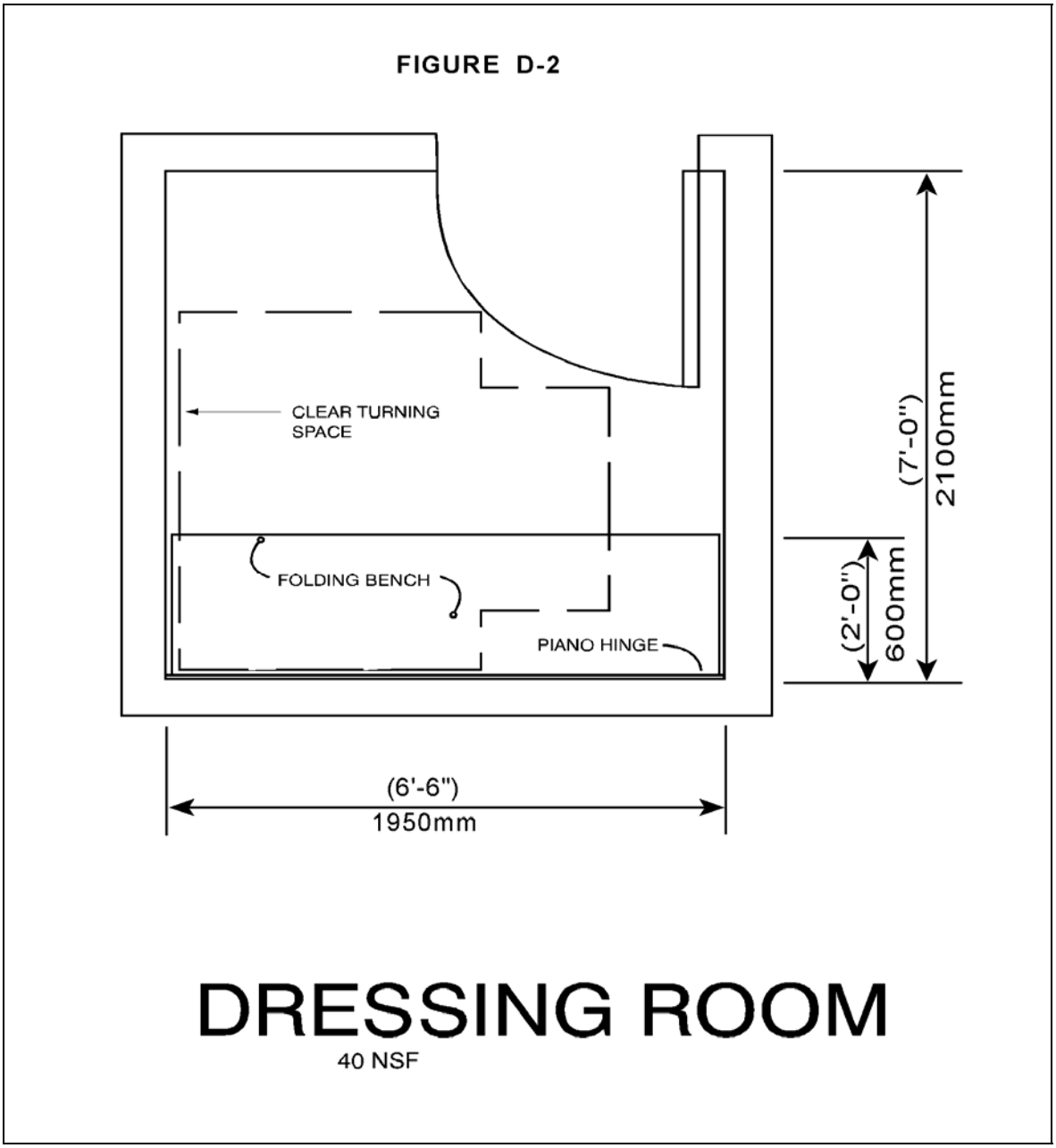
FIGURE D-2
CLEAR TURNING SPACE
FOLDING BENCH
PIANO HINGE
(7'-0")
2100mm
(2'-0")
600mm
(6'-6")
1950mm
DRESSING ROOM
40 NSF

Figure D-2

FIGURE D-3

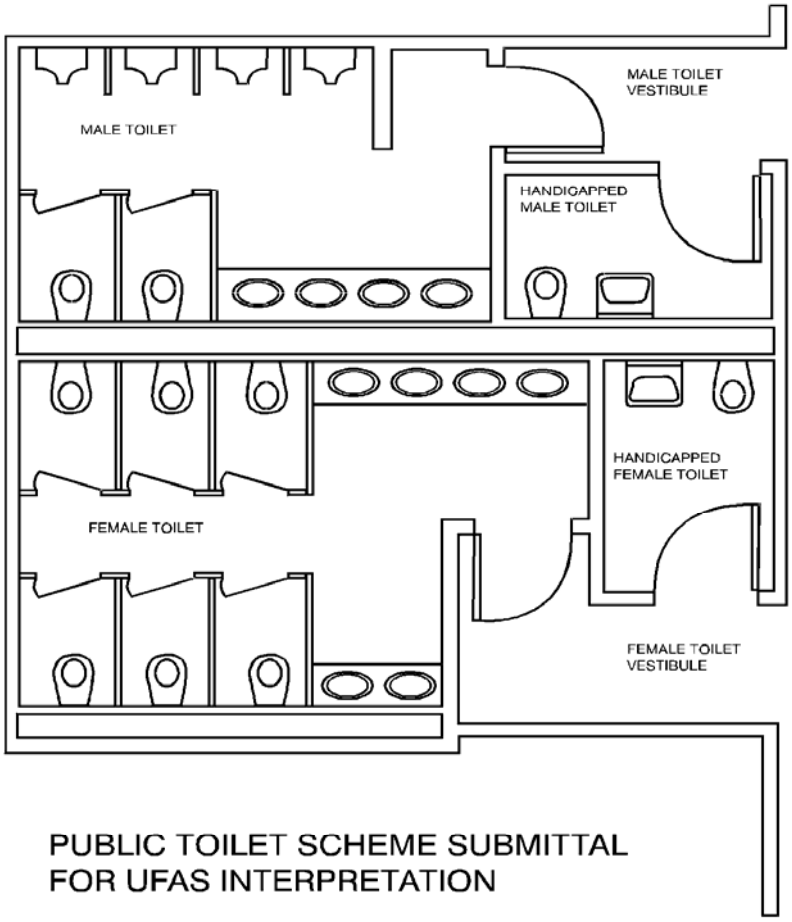

PUBLIC TOILET SCHEME SUBMITTAL
FOR UFAS INTERPRETATION

Figure D-3

FIGURE D-5

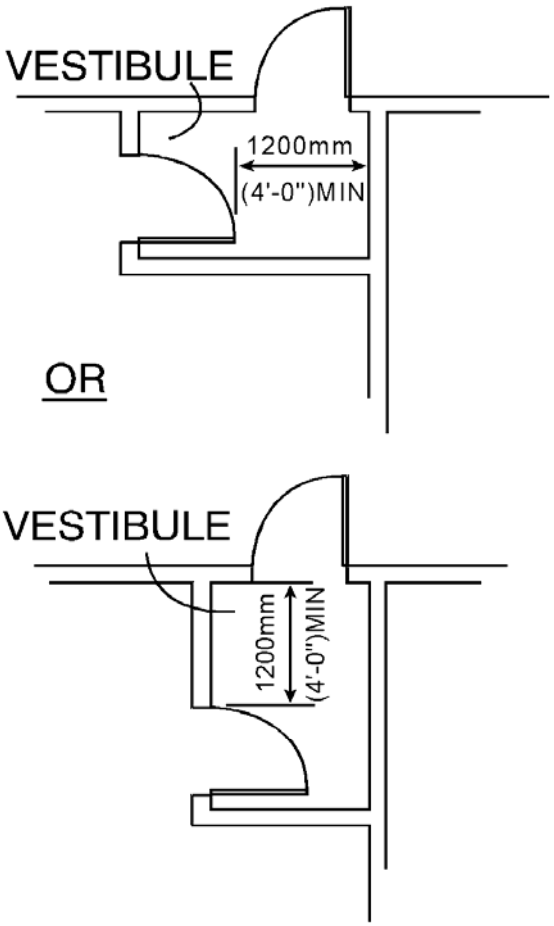

TWO HINGED DOORS IN SERIES SUBMITTAL
FOR UFAS INTERPRETATION

Figure D-5

FIGURE D-6

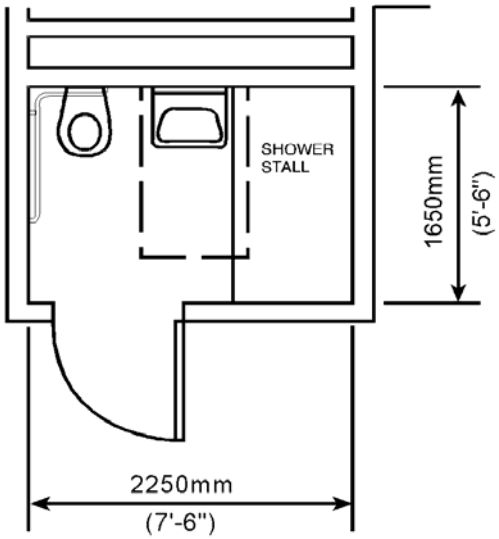

BATHROOM SCHEME SUBMITTAL
FOR UFAS INTERPRETATION

NOTE: CLEAR FLOOR SPACE OF SINK OVERLAPS SHOWER STALL, WHICH HAS NO CURB

Figure D-6

ASSISTANT SECRETARY OF DEFENSE

WASHINGTON, D. C. 20301-4000

MAY 22 1992

FORCE MANAGEMENT
AND PERSONNEL

MEMORANDUM FOR ASSISTANT SECRETARY OF DEFENSE (HEALTH AFFAIRS)

SUBJECT: Waivers and Modifications of Accessibility Standards for Psychiatric Ward at Portsmouth Naval Hospital

This responds to your memorandum requesting waivers and modifications of accessibility standards to protect life safety in a psychiatric ward.

The following provisions of the Uniform Federal Accessibility Standards are hereby waived for the psychiatric ward at Portsmouth Naval Hospital:

- ∋ 4.16.4--grab bars for water closets
- ∋ 4.17.6--grab bars for water closets
- ∋ 4.20.4--grab bars for bathtubs
- ∋ 4.20.6--shower spray unit for bathtubs
- ∋ 4.21.4--grab bars for showers
- ∋ 4.21.6--shower spray unit for showers

These standards are being waived because of the need to take special precautions in design and construction to prevent psychiatric patients from harming themselves or other people. Grab bars and protruding shower heads give patients means to commit suicide by hanging. A hose or hand-held shower unit can be used for hanging or strangulation or as a weapon. These features therefore are not required in the psychiatric ward.

Similarly, because lavatories can be removed from the wall and used as weapons, vandal-proof lavatories are desirable in psychiatric wards. The typical vandal-proof lavatory is 14 inches wide, 12 inches deep, and 10 inches high. The typical accessible lavatory is 20 inches wide, 18 inches high, and 6 inches high. Accordingly, the following modification of ∋ 4.19.2(M) is authorized for the psychiatric ward at Portsmouth Naval Hospital:

> 4.19.2(M) Height and Clearances. Vandal-proof (prison-style) lavatories shall be mounted so that 50 percent comply with Figure 31(b) and 50 percent with Figure 31(c).
>
> The lavatories in Figure 31(b) shall be mounted with rim or counter surface no higher than 38 inches (965 mm) above the finished floor. Provide a minimum knee clearance of 27 inches (685 mm) below the lavatory. The lavatory shall project a minimum of 12 inches (305 mm) from the wall.
>
> The lavatories in Figure 31 (c) shall be mounted with rim or counter surface no higher than 34 inches (865 mm) above the finished floor. Provide a minimum knee clearance of 23 inches (585 mm) below the lavatory. The lavatory shall project a minimum of 12 inches (305 mm) from the wall.

FIGURE D-7

Figures 31 (b) and (c) are attached. The rationale for using two different configurations in combination is that one facilitates a side reach from a wheelchair, while the other facilitates a forward reach.

Because modification of the standards for lavatory heights also affects mirror heights, the following modification of ∋ 4.19. is authorized for the psychiatric ward at Portsmouth Naval Hospital:

> ∋ 4.19.6 Mirrors. When lavatories are mounted as shown in Figure 31(b), mirrors shall be mounted with the bottom edge of the reflecting surface no higher than 40 inches (1015 mm) from the floor.

Any questions may be directed to Ms. Judith C. Gilliom of my staff at (703) 697-8661 or AUTOVON 227-8661.

Christopher Jehn

Attachments:
As stated

FIGURE D-7

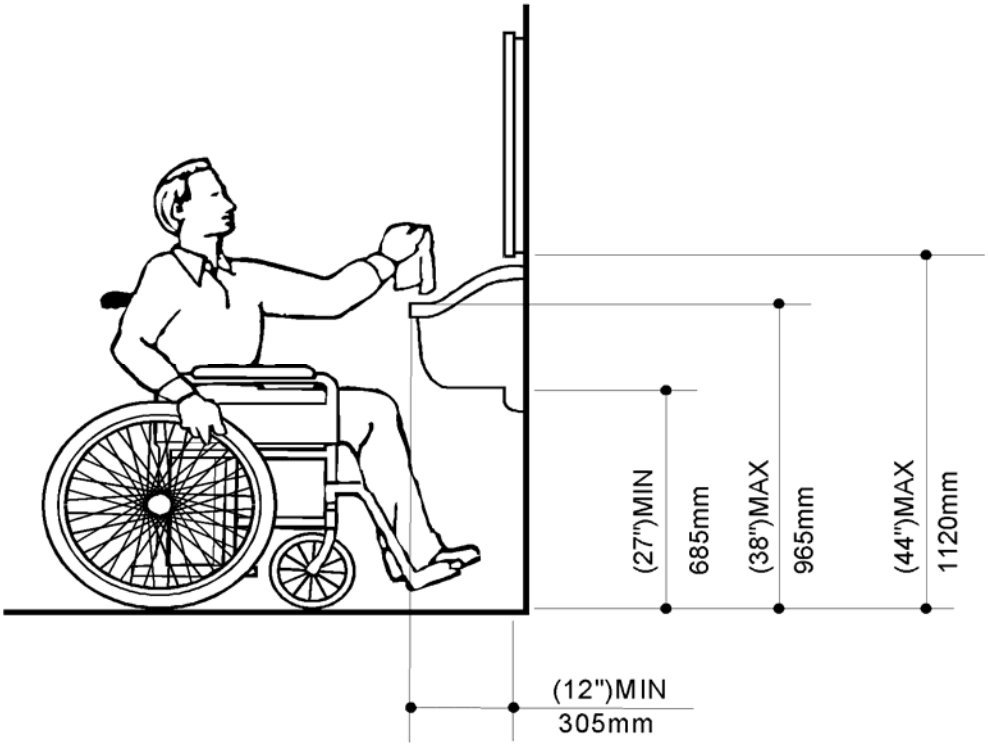

Fig. 31 (b)
Lavatory Clearances

Figure D-7

FIGURE D-7

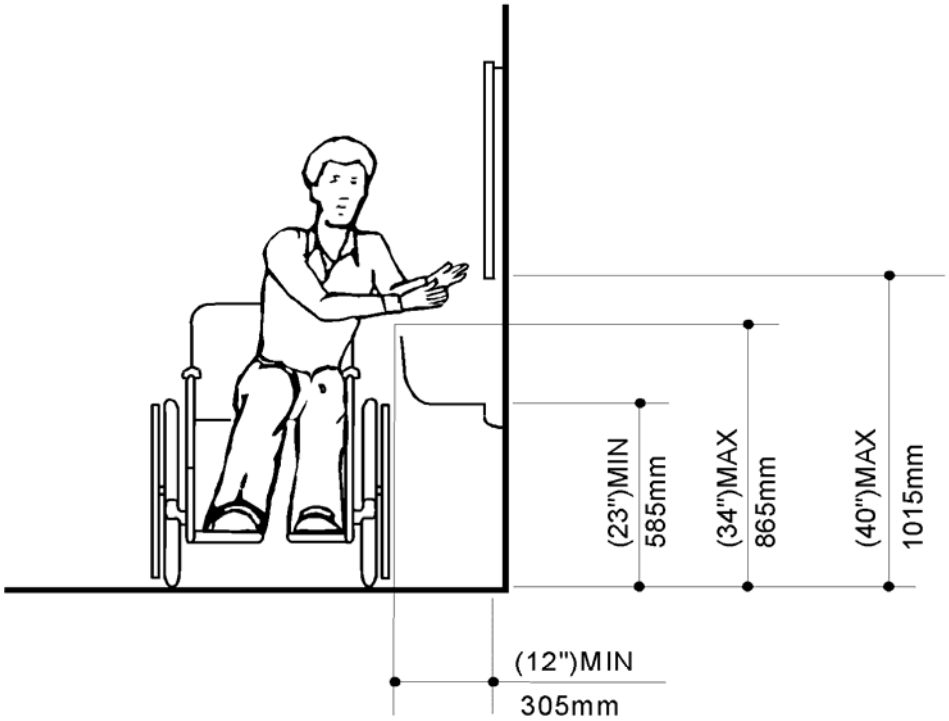

Fig. 31 (c)
Lavatory Clearances

Figure D-7

APPENDIX E

INTEGRATION OF BUILDING SYSTEMS

E-1 **GENERAL**. This section provides guidance for the use of Integration of Building Systems (IBS) concepts for the design of all medical and medical research facilities. IBS design involves the coordinated design of all elements of a building, integrating the functional, architectural, electrical, energy, fire protection, mechanical, structural, and other features into a unified whole. All design elements are recognized as essential to a successful facility, and are therefore to be treated simultaneously and with equal weight. The objective of IBS design is to achieve a building of optimum functionality, appearance, maintainability and adaptability. Attention must be given to structure, utility systems and equipment with the involvement of all design disciplines from the beginning of design in order to minimize interference with the facility mission and at the same time assure high quality utility services. Inherent in IBS design for medical and medical research facilities is the minimization of maintenance traffic and operations within functional areas through careful consideration of equipment room locations and the routing of utility services. Equally important is the assurance of proper installation, and maintainability, of primary and distribution equipment through careful consideration and coordination of envelope space requirements. Utility system space planning must occur simultaneously with overall site and facility planning. Aesthetic prominence or idealized functional planning without full coordination with structure and all utility systems is not acceptable.

E-2 **POLICY**. The basic IBS design concepts apply to all medical and medical research facilities regardless of size. The more sophisticated IBS Systems Module design concepts, including utility pods and interstitial walk-on decks dedicated to utility distribution, are to be considered only for larger or more complex facilities. Use of the IBS Systems Module design concepts must be approved by TMA-PPMD.

E-3 **BASIC IBS DESIGN CONCEPTS**.

E-3.1 **Equipment Room Locations**. In planning the locations of mechanical, electrical and communications equipment rooms, designers shall consider such factors as exterior access, the routing path and length of service feeders to the areas served, and the proximity of ventilation air intakes to potential contamination sources. Well distributed equipment rooms minimize problems in design, construction and maintenance. Coordinate all equipment room locations to minimize utility distribution "choke points," particularly in above-ceiling spaces, where multiple systems may cross or converge. Such crossings lead to inadequate space for equipment installation, maintenance and ventilation. Major equipment rooms shall have exterior access with paved surfaces for wheeled transport of equipment. Consider also requirements for horizontal and vertical access to interior, below-grade or upper level equipment rooms including transport of the largest items of equipment that may require replacement.

E-3.2 **Equipment Room Space Requirements**. The designers shall assure that equipment space requirements are properly coordinated among the different design disciplines thus permitting proper installation while preserving required maintenance

clearances. As equipment is normally competitively bid, the designers must assure that space envelope requirements are provided based on worst-case analyses of equipment from a minimum of three manufacturers. Plan and elevation views showing coordinated equipment and space envelopes shall be included in the required design submissions.

E-3.3 **Utility Distribution Considerations**. The length and complexity of utility distribution runs should be reasonably minimized to avoid unnecessarily high flow resistance with resulting additional energy consumption, larger duct and feeder sizes, and loss of future flexibility. When practicable, avoid routing utility feeders through areas they do not serve in order to minimize the impact and complexity of future facility modifications. Service isolation and balancing devices, and terminal equipment, that may require periodic inspection or maintenance should be located above corridors.

E-3.4 **Distribution and Terminal Equipment Space Requirements**. The designers shall assure that distribution and terminal equipment can be installed in the spaces indicated, including above-ceiling spaces, distribution spaces, chases, etc. This requires thorough coordination of all equipment with the architectural and structural features of the building. To assure that installation is possible, the designers shall plan distribution space requirements on the basis of sizing calculations and the worst-case joining, reinforcement and support conditions permitted by the design. The designers are particularly cautioned to carefully consider the vertical space requirements of sloped gravity piping services. The designers must also be aware of, and provide for, code-mandated dedicated space requirements above, and adjacent to, electrical panels and equipment.

E-4 **IBS SYSTEMS MODULE DESIGN CONCEPTS.** IBS Systems Module design concepts, as discussed below, are normally only economically practicable for larger or more complex facilities. Systems Module design locates the majority of utility distribution and terminal equipment on interstitial walk-on decks, thus permitting convenient installation and maintenance. A candidate project for Systems Module design shall be evaluated during initial design by an economic comparison with conventional design. All costs associated with acquisition, operation, maintenance and alteration for a period of 25 years, or the designated life of the proposed building, shall be included in the comparison.

E-4.1 **Systems Module**. The Systems Module, a designated unit of space one story in height, is the basic building block of a Systems Module building, i.e., the building is composed of separately identifiable Systems Modules each consisting of a utility pod, a distribution zone, a connection zone and an occupied zone. Each Systems Module is served by its own utility distribution systems. The relationship of the various zones is illustrated in Figures E-1 and E-2. Systems Modules should range in area from 930 to 2090 m^2 (10,000 to 22,500 ft^2). Although there is a spatial discipline associated with the Systems Module, the overall organization and massing of a building can be varied according to specific project requirements. Repetitive Systems Modules will allow both expanded forms to accommodate the need for a day-lighting/solar approach or compact forms to allow a closed approach that attempts to negate the effect of climate. These forms are illustrated in Figure E-3. In multistory buildings the utility pods shall be stacked from floor to floor so that plumbing and electrical risers can be efficiently and economically accommodated.

E-4.1.1 **Utility Pod**. The utility pod contains air handling unit(s) and associated risers, fans, pumps, etc.; electrical and communications equipment and associated risers; and other main equipment and risers serving the Systems Module. Fresh air and exhaust openings are generally part of the utility pod enclosure. Access to the utility pod is from adjacent stairs. The utility pod is defined by the floor and the underside of the floor or roof structure above.

E-4.1.2 **Distribution Zone**. The distribution zone accommodates the main horizontal utility distribution systems of a Systems Module and provides convenient access to these systems by means of a suspended walk-on deck. Utility distribution systems enter and leave the utility pod through the distribution zone. The distribution zone consists of horizontal layers of space, or sub-zones, individually dedicated to specific utility distribution equipment (pipes, ducts, raceways, conduit, cable trays, etc.). This equipment is run in distribution channels within the sub-zones. Structural suspension members for the walk-on deck should be placed to define the distribution channels. Except for gravity piping services, most systems in the distribution zone down feed to the connection zone below. Access aisles are provided on the walk-on deck for maintenance access to equipment and at the perimeter of the walk-on deck. These shall provide sufficient clearance, exclusive of major structural members, for a worker to stand. Access aisles should have clearly marked dust-free walking surfaces. Any fireproofing of structural members crossing the access aisles should be covered or otherwise protected. Access to the distribution zone shall be from adjacent stairs and also, in multistory buildings, from key-operated service elevators designed to stop at the walk-on deck levels. No access to the distribution zone shall be permitted through access panels from the connection zone. The distribution zone is defined by the walk-on deck and the underside of the floor or roof structure above.

E-4.1.3 **Connection Zone**. The connection zone is the layer of space between the underside of the walk-on deck of the distribution zone and the architectural ceiling of the occupied zone below. The connection zone accommodates the horizontal distribution of utilities to individual rooms. It shall be deep enough to accommodate recessed lighting fixtures and air diffusers and their supports. Access to the connection zone shall be from the occupied zone usually through the architectural ceiling.

E-4.1.4 **Occupied Zone**. The occupied zone is the zone of functional activity in a Systems Module. The occupied zone is defined by the floor and the architectural ceiling above.

E-4.2 **Systems Module General Considerations**.

E-4.2.1 **Design Exceptions**. Certain spaces within a building may not lend themselves practicably or economically to the use of walk-on decks. Examples are sloped floor areas; high ceiling rooms such as operating rooms, auditoriums, warehouses and atriums; and MRI suites where equipment weight or unusual structural requirements may be applicable. These exceptions should be established early in the design process so that the IBS Systems Module design concepts can be modified for such spaces.

E-4.2.2 **Building Expansion**. The Government shall inform the designers at the beginning of the design process of any vertical or horizontal building expansion requirements, and to what extent planning, structure and utility systems must provide for these requirements. Placement of utility pods should not encumber building expansion.

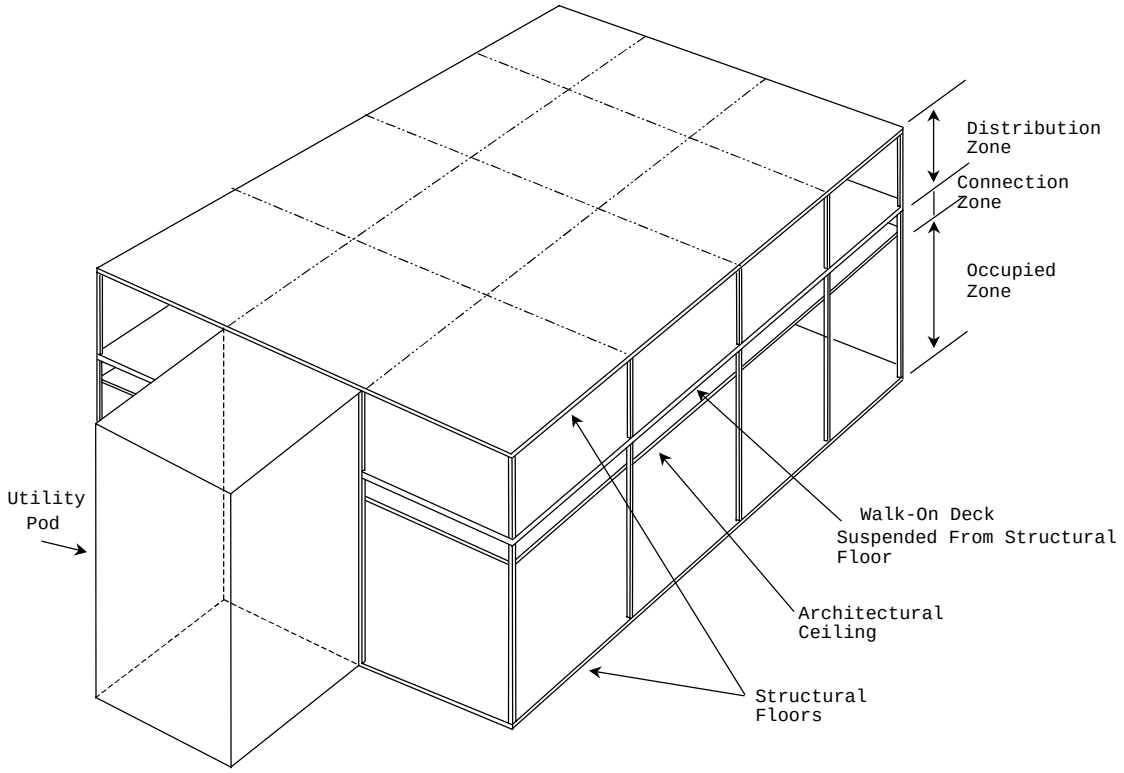

TYPICAL SYSTEMS MODULE

Figure E-1

E-4.2.3 **Existing Buildings**. When a Systems Module building is to be connected to an existing conventional building, design concerns may arise. Existing floor-to-floor heights are typically less than
the heights required for Systems Module construction. Therefore, it will be necessary to determine which new floors should align with existing floors. Continuity with existing buildings should not be hastily assumed to preclude application of the IBS Systems Module design concepts.

E-4.2.4 **System and Equipment Capacity Increases**. The designers should recommend which utility systems should be oversized to accommodate future change. Air handling units in utility pods and ducts in distribution zones may be designed to have their capacities increased for future demand growth. Other distribution systems may also be designed to accommodate a degree of capacity increase. During initial design, the Government and the designers shall jointly determine the extent of system and equipment capacity increases required.

E-4.2.5 **Distribution Zone Accessibility**. The available vertical space clearances within the distribution zone shall be sufficient to permit the organization of the utility

distribution systems for easy accessibility. It may not be practicable to arrange the distribution zone for complete accessibility to every component. However, it is important to examine the various accessibility requirements in order to best locate access aisles for primary accessibility to all main systems, feeders, connections and maintainable equipment.

E-4.3 **Systems Module Mechanical and Plumbing Considerations.**

E-4.3.1 **Riser Locations**. Risers and vertical circulation elements, not located in the utility pods, shall be located at the boundaries of
the Systems Modules adjacent to permanent structural elements, stairs or elevators.

E-4.3.2 **Valves**. Control valves, except those required to be in the occupied zone such as medical gas control valves, should be located in the utility pod to permit centralized control. Shutoff valves located in the distribution zone should be tagged and identified on a valve list that shows their distribution zone locations and the areas or equipment served in the occupied zone.

E-4.3.3 **Systems Expandability**. Prime moving equipment, i.e., pumps, fans, etc., shall be selected with conservative judgment and the distribution systems sized for expansion capability. In general, air handling units and pumps should be selected for operation at the midpoint of their operating characteristic curves. Ducts and piping should be sized to permit future flow increases. Stubs, valves and caps shall be provided in plumbing risers and in horizontal branch terminations for future service extensions.

E-4.3.4 **Air Handling System Selection**. System selection shall be based on functional needs, life cycle cost analyses, energy efficiency and ease of maintenance and repair. To enhance maintainability, it is normally desirable to “standardize” the size of air handling units when practicable from a performance standpoint. For example, several air handling units of the same unit size and motor horsepower, i.e., a modular design, will allow economy in the stocking of spare parts. “Off-the-shelf” packaged air handling units should be selected in lieu of custom manufactured units to assure parts availability and ease of future modification.

E-4.3.5 **Ventilation of Distribution Zone**. Under normal conditions, the distribution zone will not require fresh air ventilation. However, if so determined by the designers, ventilation may be required for moisture or temperature control in distribution zones exposed to roofs. A means of purging the distribution zone of smoke and other products of combustion shall be provided.

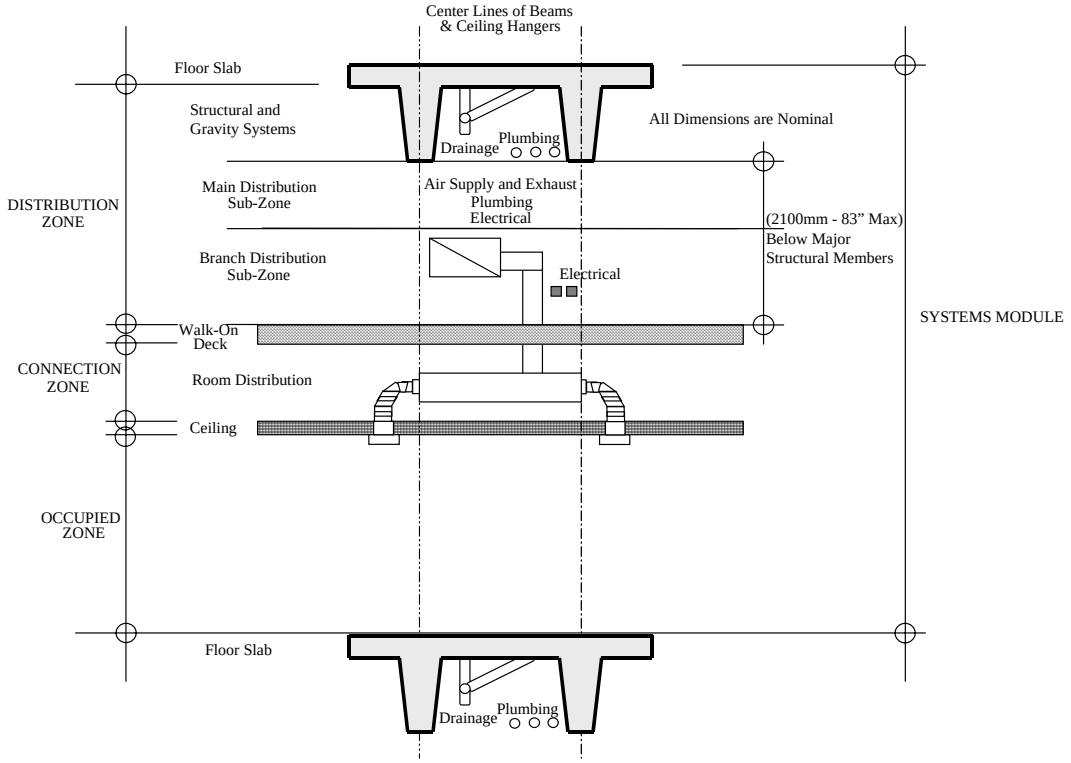

SYSTEMS MODULE ELEMENTS

Figure E-2

E-4.3.6 **Gravity Systems**. The vertical depth requirement of sloped gravity piping services should be checked to determine if such piping will drop into the next lower distribution sub-zone or if an intermediate riser should be provided.

E-4.4 **Systems Module Electrical and Communications Considerations**.

E-4.4.1 **Distribution Systems**. Distribution system routing (horizontal and vertical), and the quantity and location of unit substations, shall be based on the size of the facility, life cycle cost analyses, overall flexibility, and long-term system reliability. The benefits of underground utility service distribution to the utility pods should be compared with service distribution through the distribution zones considering flexibility, reliability and safety.

E-4.4.2 **Electrical and Communications Room Locations**. Electrical and communications rooms shall be located in the utility pods and should be stacked vertically from floor to floor. Provisions should be made for easily running vertical cabling from floor to floor, i.e., conduit risers with pull boxes at each distribution zone. Cabling and wiring shall be sized for allowable voltage drop at full design load. For very long Systems Modules, the need for additional electrical and communications rooms, located at opposite ends of the Systems Modules from the utility pods, should be evaluated for maintenance of acceptable voltage drops, reasonable lengths of secondary cable runs, and numbers of devices per circuit. These additional rooms shall

be located in the occupied zones adjacent to permanent structural elements, stairs or elevators and should also be stacked vertically from floor to floor.

E-4.4.3 **Capacities for Flexibility**. Capacities of major electrical components such as main distribution panels and transformers shall be based on the areas served, rather than specific use, to allow for flexibility. Communications systems shall be designed in a similar manner.

E-4.4.4 **Electrical Secondary Distribution**. Branch circuiting should be routed through the distribution zone to allow for modification with minimal disruption of the occupied zone. Cable trays shall be used to distribute electrical systems wiring. Ground continuity shall be provided throughout the cable tray system. Cable trays shall be designed using conservative judgment and space shall be dedicated in the distribution channels assigned to electrical services for future cable trays. See Section 12: Fire Protection for plenum rated cable requirements.

E-4.4.5 **Communications Systems Distribution**. Cable trays shall be used to distribute communications systems wiring. Ground continuity shall be provided throughout the cable tray system. Cable trays shall be designed using conservative judgment and space shall be dedicated in the distribution channels assigned to communications services for future cable trays. See Section 12: Fire Protection for plenum rated cable requirements.

E-4.4.6 **Identification**. Coded identification of electrical conduit runs by voltage and function shall be provided. Circuit identification for electrical wiring and system identification for communications wiring shall also be provided.

E-4.4.7 **Lighting**. Fifty lux (five foot-candles) of lighting shall be provided throughout the distribution zone. One hundred fifty lux (fifteen foot-candles) shall be provided over access aisles, using damage-resistant lighting fixtures. Egress lighting and exit signs shall also be provided over access aisles and at distribution zone exits. Switches shall be provided at each distribution zone entry and exit. Providing all switches with timers to turn off distribution zone lighting after a certain time interval should be considered.

E-4.4.8 **Power**. A pattern of electrical outlets shall be provided in the distribution zone for portable tools and extension cords.

E-4.4.9 **Telephones**. A pattern of telephone outlets shall be provided in the distribution zone for portable telephones. Telephone outlets located adjacent to maintainable equipment should be considered.

E-4.5 **SYSTEMS MODULE FIRE PROTECTION REQUIREMENTS**. Refer to Section 12: Fire Protection for fire protection requirements.

E-4.6 **SYSTEMS MODULE CONSTRUCTION TIME AND COST CONSIDERATIONS**.

E-4.6.1 **Construction Time**. Construction time for a Systems Module building can be less than for a conventional building. With a walk-on deck, trades can work concurrently in the occupied zone and the distribution zone rather than in sequence as in a conventional building. The majority of the work in the distribution zone can be performed in a comfortable standing position on the walk-on deck instead of from a ladder as in a conventional building. Repetition by modular design and standardization of equipment can also reduce construction time.

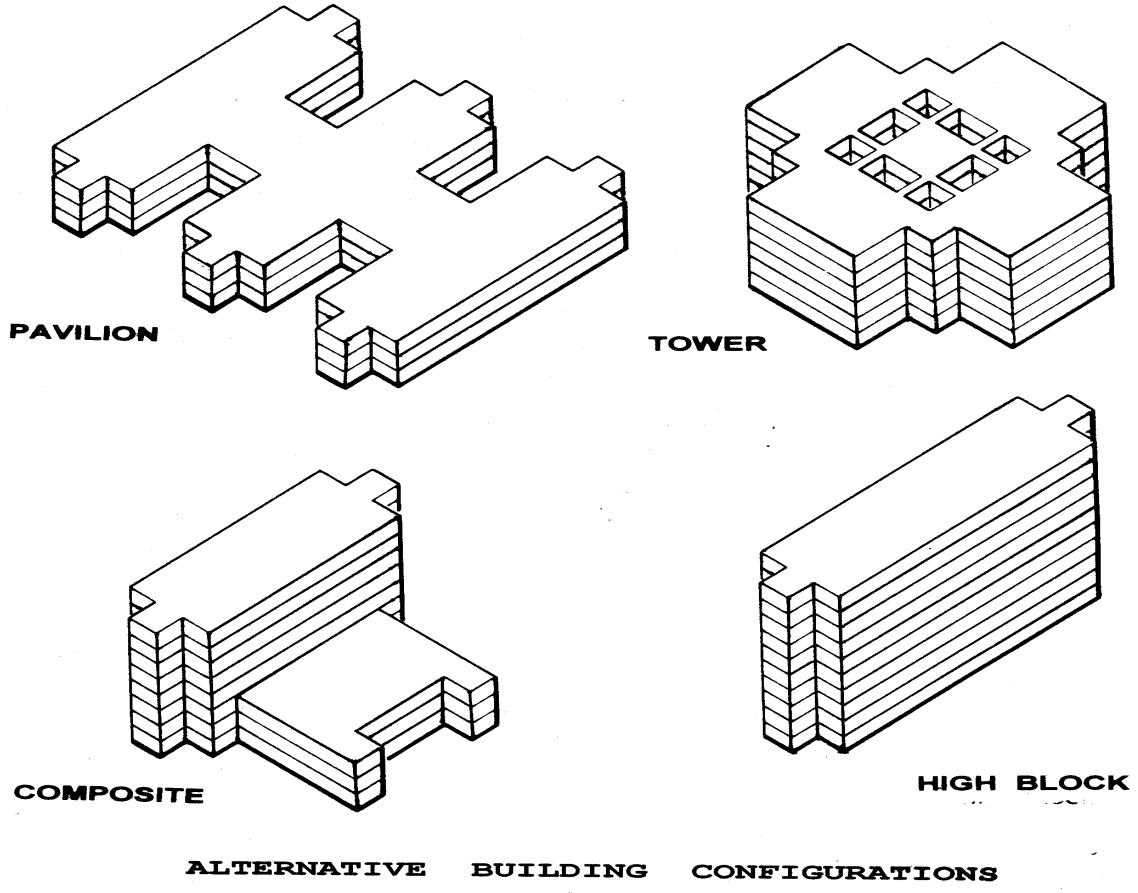

Figure E-3

E-4.6.2 **Construction Cost**. The initial construction cost for a Systems Module building can be greater than for a conventional building due to the interstitial walk-on decks and increased building height.

E-4.6.3 **Maintenance Cost**. The maintenance cost for a Systems Module building can be lower than for a conventional building when accessibility to utility systems in the distribution zone is assured by observance of the IBS Systems Module design concepts presented in this section. Equipment is more easily accessed and workers are provided with convenient power, communications and lighting to facilitate maintenance tasks. However, there will be some added maintenance cost for the distribution zone, i.e., lighting, walk-on deck and access aisle repair, fireproofing repair or replacement, etc.

E-4.6.4 **Flexibility for Modification and Alteration**. Most medical and medical research facilities undergo frequent and significant modification and alteration during

their lifetimes. In a conventional building, such changes normally result in extensive utility disruption for other areas due to the need to upgrade or modify systems. Typically, a Systems Module building modification requires only changes to distribution zone utility systems and equipment serving the portion of the occupied zone undergoing change, resulting in a simplified work effort and less disruption to the ongoing building function. Systems Module buildings inherently provide capacity for future expansion, load growth and modification, often without requiring costly primary and distribution equipment upgrades.

E-4.7 **Systems Module Documentation and Construction Considerations**.

E-4.7.1 **Construction Documentation**. Drawings for Systems Module buildings shall include plans and sections delineating utility distribution channels in each distribution zone sub-zone. Drawings shall be coordinated with all disciplines. Interdisciplinary cross-sections at critical locations, i.e., above operating rooms, equipment rooms, corridors, etc., shall be provided. Requirements for coordination of all disciplines prior to construction shall be included in all pertinent specification sections.

E-4.7.2 **Pre-Bid Conferences**. To ensure that construction contractors take the IBS Systems Module design concepts into account when preparing bids, presentations of these concepts are recommended for pre-bid conferences conducted by the Government.

E-4.7.3 **Pre-Construction Consideration**. For a Systems Module construction project, a sample distribution zone, at least 93 m^2 (1000 ft^2) in area, should be constructed at the project site. The sample should include a complete walk-on deck assembly with suspension members. The sample should also include elements of the utility systems within the distribution zone. Construction of the sample should be sufficiently in advance of building construction to allow time for necessary testing and approval. Various construction details can also be addressed and finalized with this sample, i.e., temporary protection of the walk-on deck during construction, proper support and sealing of ducts and fire dampers at walk-on deck penetrations, and permanent fire sealing of the walk-on deck to abutting walls and other permanent structural elements.

APPENDIX F

FOOD SERVICE

F-1 **INTRODUCTION**. This Section furnishes general direction for development of food service systems in both new and existing health care facilities. Past experience of military department consultants and post occupancy evaluations has been included in this criteria with the goal of minimizing errors on future projects.

F-2 **SYSTEM CONCEPT**. The Using Service in accordance with specific project requirements will determine the food service system concept. The system concept should be carefully planned with the end user to ensure that the proper system is designed and constructed. Care should be taken to include issues that directly impact on system functionality. These issues include labor, prime vendor, and the FIVE M's of food service: Menu, Market, Money, Management and Method of execution.

F-3 **CONSULTING SERVICES**. The designer will provide the services of a qualified food service consultant. A qualified food service consultant is one who has been in business solely as a food facilities design professional for a period of not less than two years. The consultant must not be involved in the sale, installation, distribution, manufacture, or representation of food service equipment. Furthermore, the consultant must demonstrate prior experience on Military and / or Health care facilities that relate to the scope and nature of the project.

F-4 **FOOD SERVICE OBJECTIVES**.

F-4.1 Food service design will be based on the following objectives:

F-4.1.1 To provide a functional and aesthetically pleasing nutritional care facility for patients, service members, staff and guests, within budgetary guidelines.

F-4.1.2 To design dietary facilities to maximize performance from personnel, facilities and equipment while producing high quality nutrition care products.

F-4.1.3 To design a food service system with the ability to adapt readily to changing missions, requirements, food preparation processes, labor conditions and equipment technology. This is an objective that requires forethought from the service component, end user and food service consultant. Often the easiest methods of building in flexibility to a design is planning additional electrical capabilities, incorporating dual use equipment, including modular equipment that can be broken down by the facility management branch or end user and reconfigured.

F-4.1.4 Provide high quality food service equipment that is manufactured in the United States, sized to accommodate the maximum capacity of the facility at time of design. Food service equipment must meet National Sanitation Foundation (NSF) standards for acceptance. Equipment should be dual functional if possible. Electric equipment must be Underwriters Laboratory approved. Gas equipment must be American Gas Association (AGA) approved. Foil labels for both of these authorities shall be mounted on the equipment items for easy identification. Finally, standard,

readily available food service equipment should be planned as much as possible. Custom fabricated equipment should be limited to the servery, walk-in refrigeration and space restricted pieces of equipment only. Cost savings are a direct result for including more stock equipment over custom equipment. (See Section 15, Equipment, for additional guidance.)

F-4.2 Four food service systems will constitute the physical planning basis.

- Conventional Food Systems
- Convenience Food Systems
- Cook/Chill Food Systems
    - Cook/Chill/Freeze Food Systems (also termed the Cook/Freeze or Ready Food System)

It is also very common to provide a combination of Conventional and Convenience Food Systems within the same facility. Recent history dictates that some consideration must be made to construct facilities that are easily converted from conventional food service production to a mix of conventional and convenience food service systems. Emphasis on walk-in freezers and rethermalization equipment is essential to a smooth conversion. Over time food service systems evolve in size and scope. Care should be taken to build in flexibility and modularity of food service equipment and physical plant design.

F-5 **CONVENTIONAL FOOD SYSTEM**. With a conventional system, foods are prepared from basic ingredients with full range of processing done on the premises. Foods are prepared and then maintained at appropriate serving temperatures until served; thus foods are prepared as near to meal times as possible (See figure F-1).

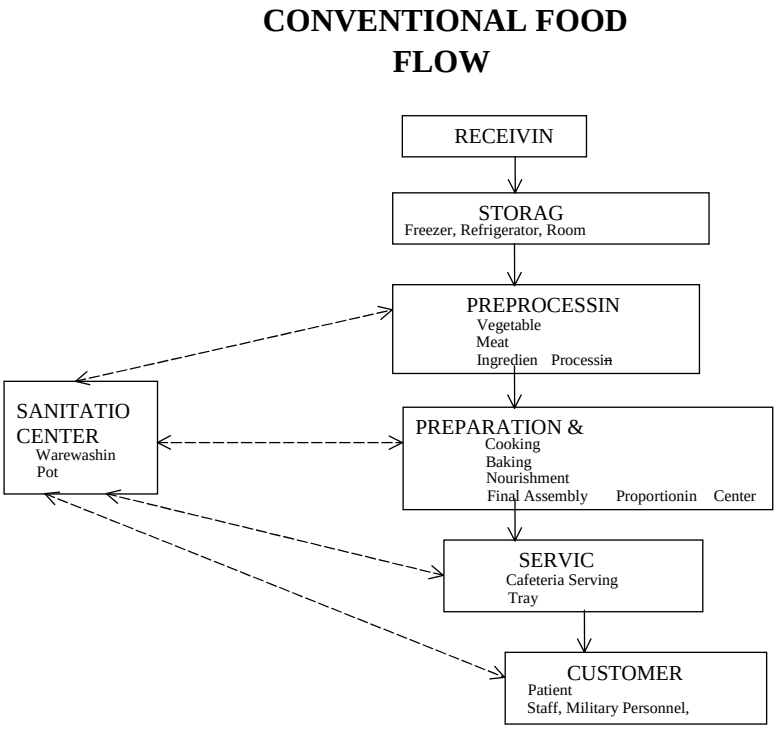

Figure F-1: Conventional Food Service Flow Diagram

Conventional Food Systems are equipped with full service bakery, salad and sandwich preparation areas. Current studies show that temperature controlled cold rooms (50 F) are ideal for preparing cold salads, sandwiches and breaking down meat into meal quantities. Hazard Analysis and Critical Control Point (HACCP) studies show that food borne illness is decreased due to the increase of food safety created by the refrigerated food preparation environment. Butcher shops complete with meat saw and grinder, are not needed in most facilities. The salad/sandwich preparation area should be designed so that finished food products can be moved easily into a walk-in refrigerator that safely stores the items at or below 40 F. Coordinate table top equipment items with specific facility requirements.

F-6 **CONVENIENCE FOOD SYSTEM**. With a convenience system almost all foods utilized are fully prepared foods purchased from outside sources and properly stored. Some in-house cooking and/or preparation will supplement purchased prepared foods (salads, vegetables, etc.). The prepared foods are subsequently brought to their appropriate serving temperatures on the premises as near to meal times as possible and maintained at these temperatures until served. Today many food services are using different forms of convenience foods that require extensive rethermalization equipment units that also double as a holding unit, thereby increasing the flexibility of the equipment item. Refrigeration and freezer space is also an important consideration. Space for these units should be calculated at 0.014 cubic meter (0.5 cubic feet) per meal served per day. This figure also depends on prime vendor delivery and should be

significantly increased if deliveries are not scheduled at least three times per week. Material handling equipment and aisle space is important when designing a convenience food system. Flow of personnel and food product is a strong consideration in designing a convenience food system.

F-7 **COOK/CHILL FOOD SYSTEM**. With a cook/chill system, foods are prepared from basic ingredients with the full range of processing done on the premises. Foods are prepared, appropriately packaged, then quick chilled and stored under refrigeration. The prepared foods are subsequently brought to their appropriate serving temperatures as near to meal times as possible and maintained at these temperatures until served.

F-8 **COOK/CHILL/FREEZE FOOD SYSTEM**. In a cook/chill/freeze system (cook/freeze or ready food), foods are prepared from basic ingredients, and all processing is done on the premises. Foods are prepared, appropriately packaged, then quick chilled or quick frozen. Currently, there are two methods of quick chilling: “Blast Chilling” and “Water Bath Chilling”. Blast Chilling requires extensive refrigeration infrastructure, which must be considered and carefully planned. The water bath chilling method also demands extensive planning and a chilled water system from the physical plant. If a chilled water system is not available a “ice builder” which supplies ice water for chilling must be integrated into the plan at great expense and space. These methods of food service are complex and require extensive planning from specialized consultants with a proven track record of success. Equipment issues include: mixer kettles, pump and fill stations for Cryovac food processing, cook and chill tanks, tumble chillers for water bath chilling, casing (Cryovac bags) conveyors to move heavy food containers. The prepared foods are brought to their appropriate serving temperatures as near to meal times as possible and maintained at these temperatures until served (See figure F-2).

READY FOODS SYSTEM
FLOW DIAGRAM

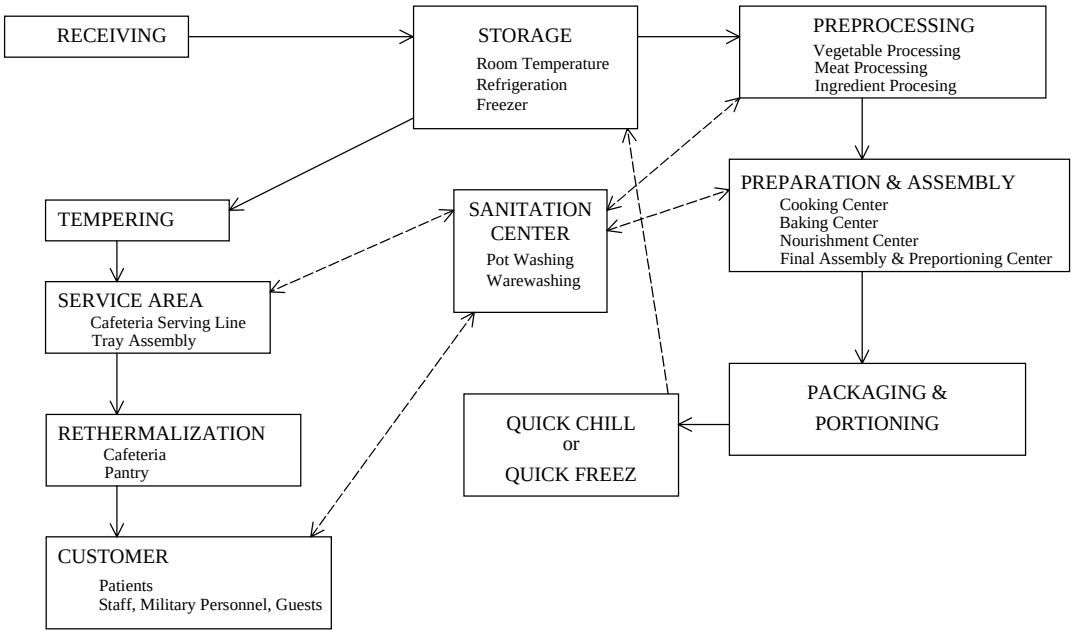

Figure F-2: Ready Foods System Flow Diagram

Heating equipment should be flexible and perform holding functions in addition to rethermalization duties. Timers that heat food until “just done” and then hold food at a safe temperature should be included into planning of these systems.

F-9 **PLANNING CRITERIA**.

F-9.1 Food service design will provide for the movement of food products (raw, in process or finished), warewashing, patient tray carts, employees and ambulatory patients in a manner that will minimize cross traffic, backtracking and queuing conditions.

F-9.2 Planning principles that will be considered for food service system design are as follows:

F-9.2.1 All food storage, preparation, servery, assembly and sanitation operations will be located on a single floor. The general configuration of the food service operation will be rectangular.

F-9.2.2 The food service area will be in proximity to an independent covered food delivery entrance. If a loading/receiving dock is required, it shall be equipped with dock levelers to adapt to delivery trucks of varying heights and sizes. A stairway from the

dock to the driveways shall be provided. The receiving area will include a platform scale with two digital readouts, one located at the receiving point, with the second located at the receiving office. The receiving area will not be accessible from outside of the building.

F-9.2.3 The food service operation will be located in vertical and horizontal proximity to the maximum concentration of patients and to the staff cafeteria. All refrigerators and freezers will be connected to a single control panel with temperature readout. All refrigerators will be fitted with a visual and audible alarm that annunciates in the food service department. An alarm annunciator in the facility management control room is also suggested. All refrigerator systems shall be equipped with temperature gauges located at the outside entrance of the walk-in unit. Compressors shall be located in close proximity to the refrigeration's systems, in a ventilated room with a floor drain and hose bib. See Section 7 (HVAC) for ventilation criteria. Compressors shall be labeled as to which refrigeration unit they service. When using chilled water backup, a redundant pump should be included to avoid refrigeration and freezer compressor damage and food product loss. All refrigeration and freezer units shall be placed on the equipment emergency power system to provide department functionality during periods of crisis. See Section 9 (Electrical) and Appendix A for emergency power requirements.

F-9.2.4 Food preparation work centers will be located to minimize traffic from storage areas (ingredient issue room, dry storage and refrigerated storage), servery, cafeteria and tray assembly and sanitation warewash centers.

F-9.2.5 The patient tray assembly area, with appropriate serving equipment, shall be located adjacent to both hot and cold work centers. If hot food is served from the patient tray assembly, equipment will be arranged so hot food is placed onto patient trays last. In some large facilities a griddle with ventilation may be needed. Patient tray cart storage will be located adjacent to the patient tray assembly area. There will be a direct route from tray assembly to service corridors and/or elevators and to patient care areas. Dedicated elevators will be provided to food service in large medical centers. Depending on the cart delivery system, the reconstituting of patient food may be accomplished at the patient care floor nourishment center. Current practice is to serve patient food directly from a cart with a tray of food that has already been assembled and portioned. Patient tray assembly areas should also include some type of energy distribution system that provides flexibility to the end user. The design should also include pass through warmers and refrigeration to ease bulk food movement. Beverage islands should be planned and should include a water source, electricity, and an underfloor installation of a 100mm (4") (minimum size) Polyvinyl Chloride conduit for "piggy-back" soda and juice fountains. The tray line itself should be flexible to decrease or increase trays without extensive infrastructure requirements. Electrical outlet drops should also be planned from the ceiling for versatility of tray line reconfiguration.

F-9.2.6 Dishwashing and warewashing (pot washing) will be designed to prevent crossing workflows between soiled and clean wares, and service and food preparation areas. Mechanical washers will be supplemented with compartment (three compartments minimum) sinks. All dishwashers will be equipped with blow-drying feature. All ware washers and pot and pan washers shall be installed with a condensation hood designed to remove hot moisture laden air. Special care will be

taken to provide ware washers that pre-wash at 100 - 120 F, wash at 140 - 160 F, rinse at 160 - 180 F, and final rinse at 180 - 195 F. If low Temperature ware washers are used, they must be designed to dispense a chemical sanitation agent. Problems with environmental issues may out weigh the benefits of this type of ware washer. The design must include floor drains in the ware washer center, located to directly service the piece of equipment requiring a drain. Minimize runs of piping from equipment to drains. Cart washers and can washers may be included in some large medical centers. If cart/can washers are provided, planners should consider water supply and drainage in these areas.

F-9.2.7 Telephones with speaker/microphone features are required throughout the food service department (offices, tray assembly, serving lines, storage and receiving areas). Coordinate telephone requirements with Section 10 (Communications). Voice and Data outlets are required in all office areas and at each cashier station. Hands-free intercom features are required in all offices, at each cashier station and at patient tray assemble workstations. A class B telephone line (post or base only capability) should be included in the dining facility for medical staff paging responses.

F-9.2.8 A toilet/shower/locker room shall be provided for the dedicated use of the nutrition care staff. Access to these rooms shall be from within the food service department only.

F-9.2.9 Dietary trash and waste handling requirements must be considered in conjunction with the total health facility waste handling requirements to minimize duplication of facilities (see Section 17 Waste Management). Dining, food preparation, servery and processing areas will be designed to avoid transporting trash through food handling and/or preparation areas for disposal. Waste pulping disposing systems will be provided to minimize the volume of solid waste product disposal. Recycling areas shall be provided within the food service department for separating and recycling of cardboard and plastics.

F-9.2.10 All point of sale equipment (cash registers and their interconnected Personal Computer) shall be on emergency power. See Section 9 (Electrical) and Appendix A for emergency power source requirements. Equipment shall be evaluated for inclusion on the emergency power system to assure food service operations are not impacted by loss of power. If gas and steam equipment is provided, verify its electrical needs to assure that adequate emergency power is available to maintain these items in operation. Some cooking equipment must not run if exhaust hoods are not operating, therefore, confirm emergency power to exhaust hoods is also provided, where required. Lighting within the food service areas must be at an acceptable level so continued food service operations can occur under emergency conditions. Provide a dedicated electrical supply for the cash register system. Provide conduit runs from each cashier station to the office which will house the managers' computer workstation. The cash register electrical power system shall be on emergency power.

F-9.2.11 Where gas and direct steam are locally available, a mix of gas, direct steam and electric equipment will be utilized. Care must be taken to minimize the use of electric equipment when gas and/or steam is available. The use of gas and/or steam

equipment provides a significant cost savings that should be considered when planning utilities in the food service area.

F-9.2.12 Portable equipment (locking casters, quick disconnects, cords and plugs) will be utilized to the maximum extent possible (production, serving and assembly areas). When portable equipment is not possible, wall mounted equipment (i.e. kettles, trunnions) will be used. Equipment will not be installed on raised bases. When wall mounted or cantilevered equipment is used, adequate wall backing and bracing must be detailed in the contract documents.

F-9.2.13 Where steam operated equipment permits direct contact between food and steam, intermediate steam shall be generated directly or indirectly, for example, using a plant-steam to clean-steam heat exchanger. Steam must be considered sanitary and/or “clean”. The steam must not contain any chemical contaminants associated with descaling agents, which extend boiler life but pose significant health problems.

F-9.2.14 All storage areas (dry, refrigerated, and frozen) will be equipped with shelving systems appropriate to the application and to maximize space utilization. The use of high density or track shelving shall be considered to expand storage space and maximize the storage area. Shelving shall be finished with galvanized steel, zinc coated carbon steel, and chrome plated carbon steel or extruded aluminum. The style of shelving largely depends on the application of the shelving. Louvered and open wire shelving are most commonly used in walk-in refrigeration to encourage air movement. Dry storage areas often feature solid or embossed shelving for their strength and ease of cleaning.

F-9.2.15 All handwashing sinks shall have “hands free” operation (wrist, elbow, knee, or sensor operated). Sensor operated is preferred, however, material cost and maintenance costs must be evaluated before this type of fixture is used. If sensor operated is determined appropriate, the fixture must include a manual override. Wall mounted towel dispensers and waste receptacles will be provided in immediate proximity to each sink unit. Coordinate requirements for liquid soap dispensers with the facility user as these may be provided under a vendor contract.

F-9.2.16 Food Services will be designed to comply with Joint Commission Standards for Care of Patients, the National Sanitation Foundation Standards, and TB MED 530.

F-9.2.17 Cafeteria serving areas will be designed to accommodate a la carte pay pricing policies. Plan servery to serve large volumes of customers at one time. A scatter, hollow square or scrambled servery design should be included in all ala cart facilities. Cashier and serving stations and salad bars will be designed with tray glides for customer ease of movement. The design must allow for generous queuing room at the cash register stations. Beverage stands should be supplied with the following: water source, piggyback soda fountain conduit, steam (if available), ample electricity for expansion, and adequate drainage. Serving stations for breads, desserts, and short order cooking require extensive planning with the end user.

F-9.2.18 All kitchen exhaust hoods must be factory fabricated. Field fabricated hoods must not be used, as quality standards are inconsistent. All kitchen exhaust hoods will be designed to be self-cleaning. Kitchen ventilation shall be designed to provide the end user with adequate hoods to accomplish exhausting requirements. Care must be taken to increase ventilation capability when deep fat fryers and charbroilers are planned. Refrigeration equipment must not be planned under kitchen ventilation systems unless it is incorporated into a piece of cooking equipment.

F-9.2.19 Finishes throughout Food Service shall comply with Appendix A. Corner guards, wall guards and steel kick plates for doors should be planned liberally throughout the kitchen. Cart wash areas and dish machine areas should be finished for wet environments. Floors shall be finished with quarry tile for durability and resistance to moisture. Most quarry tiles do not require sealing. Care must be taken when preparing the contract specifications to not require sealing of quarry tile, which could produce a slipping hazard to staff. Quarry tile grout may be integrally colored to present a uniform color of the floor plane. Corridor floors should be finished in vinyl tile, with a polished finish. Dining areas and offices should be finished in carpet. The carpet shall be a commercial grade, with stain and fade resistant properties, and include an anti-microbial feature.

F-9.2.20 Space shall be provided for automatic data processing operations and equipment that are components of the food service department. Space for a floor safe shall also be included within the food service department.

F-9.2.21 If the medical facility utilizes an information system or other interdepartmental system (i.e. automatic writing transfer equipment), food service shall be linked to this system. Any and all Nutrition Management Information Systems will be connected to the hospital information management computer room.

F-9.2.22 Equipment in nourishment pantries shall be included on emergency power. See Section 9 (Electrical) and Appendix A for emergency power requirements. Include the following equipment on the equipment emergency power system: ice machine, microwave oven, and refrigerator/freezer. The service pantries will be designed to provide 24-hour access to the ice machine and refrigerator/freezer. Food cart storage will be adjacent to 24-hour access areas, but shall be designed so that they can be secured. Coordinate requirements for full service pantries with the facility user. Provide a small area to rethermalize foods and maintain refrigerated food items. A sink, drinking water and ice source should also be planned in these areas.

F-9.2.23 A lockable refrigerator will be provided in a controlled, secure area within the Department of Nursing for storage of emergency late meals (patient and/or staff night suppers).

F-9.2.24 Grease traps, when utilized, will be located outside the buildings. Grease trap access should be planned so that cleaning is easy to accomplish. Coordination with local environmental regulations is required.

F-9.2.25 All openings or penetrations of any horizontal or vertical finish surface must be thoroughly sealed so as not to provide hiding places for vermin or encourage the growth of bacteria. Sealant must be water and detergent resistant silicone.

F-10 **FACILITY DATA REQUIREMENTS FOR FOOD SERVICE**. To assure an accurate design is prepared, facility and patient data will be provided by the using service to the designer and the food service consultant as follows:

- The number of hospital beds.
- Pantry requirements.
- The required number of dining rooms meals.
- Vending requirements.
- The number of male and female dietary employees.
    - Staffing projections per shift in critical areas (warewashing, tray assembly, cafeteria service)
- Peak Meal
- Service Style
- Meal hours and peak hour
- Percent of take-out meals

F-11 **SEISMIC CRITERIA**. The planning, selection and installation of food service equipment will be carefully considered with regard to potential damage by earthquakes. Special attention will be given to the mounting of fixed equipment, to utility connections and to the design features of selected equipment. The required seismic protection will depend on the seismic design level prescribed for individual projects. All bracing details for food service equipment shall be indicated on the contract documents. See the Seismic Section for additional requirements.

F-12 **FOOD SERVICE EQUIPMENT SPECIFICATIONS**. All contractor provided food service equipment items identified on the contract drawings shall be specified in detail. The latest technology shall be specified. All equipment shall meet Environmental Protection Agency standards where required. All equipment shall be specified to meet NSF, UL and AGA standards. As a minimum, each equipment item shall be specified to include the following:

F-12.1 Applicable codes, standards and references

F-12.2 Joint Schedule Number (JSN) identifier

F-12.3 A requirement to provide Operation and Maintenance Manuals

F-12.4 Materials, components, colors and finishes

F-12.5 Any optional features or devices selected by the using military department

F-12.6 Full and complete description of the item, including all salient features

F-12.7 Structural and seismic requirements, including backing, kits, etc

F-12.8 Complete utility requirements (steam, water, electric, gas)

F-12.9 Complete installation instructions

F-12.10 Testing and inspection requirements

F-12.11 Training requirements

F-12.12 Submittal requirements, including layout and installation plans; components, materials, colors and finishes; and full description of any optional features or devices

F-13 **FOOD SERVICE DRAWINGS.** Contract drawings shall indicate a mounting height for all wall hung equipment items. Provide complete mounting details, including type and location of backing or blocking, for all wall mounted equipment. Details shall be provided for equipment that is contractor furnished-contractor installed, government furnished-contractor installed, and government furnished-government installed.

GLOSSARY OF TERMS, ABBREVIATIONS, AND ACRONYMS

ABC. Automatic Box Conveyor; (also known as Electric Track Vehicle (ETV) or Powered Track Tote Box Conveyor System (PMTCS)). A rail system utilizing self contained buss bars to provide power to special carriers that contain and move small supply, demand and other items between stations on the track network.

ACD. Automatic Call Distribution—telephone system.

ACGIH. American Conference of Governmental and Industrial Hygienists. http://www.acgih.org/

ACI. American Concrete Institute. http://www.aci-int.org/

ADAAG. Americans with Disabilities Act Accessibility Guidelines.

ADP. Automated Data Processing. Any equipment that is used in the automatic acquisition, storage, manipulation, management, movement, control, display, switching, interchange, transmission or reception of data information.

ADPE. Automatic Data Processing Equipment. General purpose, commercially available automatic data processing equipment, and the systems created by them.

A/E. Architecture and Engineering Firm.

AFM. Air Force Manual.

AHA. American Hospital Association http://www.aha.org/

AHJ. Authority Having Jurisdiction.

AHU. Air Handling Unit.

AIA. American Institute of Architects. http://www.aia.org

AICUZ. Air Installation Compatible Use Zone.

Air Handling Unit. An air conditioning unit consisting of fan(s), coil(s), filter(s), and other components designed and sized for supplying conditioned air to a given area or space(s).

AISI. American Iron and Steel Institute. http://www.aisi.org/

Alteration. Spaces within an existing structure requiring some level of modification to bring the space into compliance with code(s), regulations, or functional requirements. (See Section 1).

Alternate Power Source. One or more generator sets, or battery systems where permitted, intended to provide backup power during the interruption of the normal electrical service; or the public utility electrical service intended to provide power during interruption of service normally provided by the generating facilities on the premises.

Ambulatory. Able to walk; not confined to bed.

Ambulatory Care. The examination, diagnosis, treatment and proper disposition of all categories of eligible inpatients and out patients presenting themselves to the various ambulatory care specialty and/or subspecialty clinics.

Ambulatory Care Clinic. An entity or unit of a medical or dental treatment facility that is organized and staffed to provide healthcare and holds regular hours in a designated place.

Ambulatory Health Care Center. A building or part thereof used to provide services or treatment to four or more patients at the same time and meeting either (a) or (b) below. Ambulatory health care centers exhibit some of the occupancy characteristics of business occupancies and some of the characteristics of health care facilities. Ambulatory care medical clinics and similar facilities that are contiguous to health care occupancies but are primarily intended to provide outpatient services may be classified as ambulatory care occupancy provided the facilities are separated from health care occupancies by not less than 2-hour fire-resistive construction.

a) Those facilities that provide, on an outpatient basis, treatment for patients that would render them incapable of taking action for self-preservation under emergency conditions without assistance from others, such as hemodialysis units or freestanding emergency medical units.

b) Those facilities that provide on an outpatient basis surgical treatment requiring general anesthesia.

A.M.R.T. Average Maximum Ride Time.

Anesthesia. Partial or complete loss of sensation, with or without consciousness, as a result of drug, disease, or injury.

Anesthetic. Applies to any inhalation agent used to produce relative analgesia or general anesthesia.

Anesthetizing Location. Any area of the facility that has been designated to be used for the administration of any flammable or nonflammable inhalation anesthetic agents in the course of examination or treatment including the use of such agents for relative analgesia.

ANSI. American National Standards Institute. http://www.ansi.org/

Antiseptic. The prevention of decay, putrefaction or, sepsis through use of an agent that will prevent or arrest the development of microorganisms.

Apparatus. Furniture, laboratory hoods, centrifuges, refrigerators, and commercial or man-made on-site equipment used in a laboratory.

Appliance. Electrical equipment, generally other than industrial, normally built in standardized sizes or types, which is installed or connected as a unit to perform one or more functions.

Architect-Engineer (A-E or A/E) Firm. A business composed of professional architects and engineers.

Areas of Refuge. Areas protected from fire or smoke separated from all other spaces in the same building or an adjacent building that permits a delay in egress travel from any level.

ARI. Air Conditioning and Refrigeration Institute. http://www.ari.org/

Asbestos. A natural mined mineral which is a good thermal insulator, a good acoustical insulator, fire resistant, resistant to friction and wear, and a poor conductor of electricity. Known to cause lung cancer, mesothelioma, and other forms of cancer in the stomach and colon.

ASCE. American Society of Civil Engineers. http://www.asce.org/

Aseptic Environment. An environment or area that is intended to be free from pathogenic microorganisms to prevent infection.

ASHRAE. American Society of Heating, Refrigerating and Air Conditioning Engineers, Inc. http://www.asrhae.org/

ASME. American Society of Mechanical Engineers. http://www.asme.org

ASTM. American Society of Testing and Materials. http://www.astm.org/

ATBCB. Architectural and Transportation Barriers Compliance Board. http://www.access-board.gov/

Atrium. A floor opening or series of floor openings connecting two or more stories that is covered at the top of the series of openings and is used for purposes other than an enclosed stairway; elevator hoistway; escalator opening; or utility shaft used for plumbing, electrical, air conditioning, or communication facilities.

Authority Having Jurisdiction (AHJ). The “authority having jurisdiction” is the organization, office, or individual responsible for “approving” equipment, an installation, or a procedure. For Department of Defense Medical and Dental Treatment Facilities, and the UFC 4-510-01, the authority having jurisdiction is the TMA/PPMD. See also Governing Body.

Autoclave. An apparatus for sterilizing utilizing steam under pressure.

Automated Guided Vehicle System (AGVS). Also known as “Driverless Vehicle System” (DVS): This system utilizes a battery powered, electronically controlled vehicle that follows a predetermined route (guide path or track that is buried in the floor or adhered to its surface) to move carts and material throughout the facility. The system utilizes the guide path network and special elevators to make the horizontal and vertical routings. Different degrees of automation and capabilities are available. The basic system components commonly found in a hospital application include: Driverless Vehicles, Elevators, Carts (Modules), Guide path and controls, Cartwash(s), Battery charge equipment, etc.

Average Interval. The elapsed time in seconds between elevator departures from a terminal floor, averaged over a specific time period. Average interval is a measure of the “quality” of elevator service. Average interval can be measured in existing buildings but must be calculated for new buildings. For practical purposes it can also be viewed as the average round trip time of an elevator, divided by the number of elevators within the group in question. Average interval is not a direct measure of how long prospective passengers wait for service.

Average Maximum Ride Time (A.M.R.T). The amount of time a passenger is in an elevator from the point of origin to the destination is referred to as the ”ride time”.

Average System Response Time. The average time it takes for hall calls to be answered by an arriving elevator car. This is an estimated or simulated factor for new facilities but can be measured for existing facilities.

Average Waiting Time. The average period that users wait for elevator service. This is an estimated, or simulated factor. For example, if one person arrives at a lobby and initiates a hall call, and waits for 20 seconds for the car to arrive, while a second person arrives at the same time as the car, the average for these two persons being served is 10 seconds (20 seconds plus 0 seconds divided by two). Tests indicate that average passenger waiting time (AWT) for service at a typical intermediate floor approximates 65% to 80% of the average interval during heavy two-way traffic periods.

Backflow Prevention. The use of a recognized device to prevent the backflow of water or other liquids, mixtures, or substances into the distributing pipes of the potable supply of water from any source such as a plumbing fixture or mechanical equipment.

Base Isolation. This is a seismic construction element to prevent ground motion from being transmitted from the building foundation into the superstructure.

Basic Life Safety (Seismic). A seismic damage risk classification category and an operational level category. Facilities in this category meet the minimum requirements and objectives of seismic building codes—to provide a collapse resistant structure and thereby save lives. The life safety of the immediate building occupants is the sole objective of this category. Efforts to control damage due to earthquake in this category are minimum and limited primarily to the saving of human life. (See Section 5).

Bed Capacity. Number of beds that a hospital can accommodate.

Beneficial Occupancy Date (BOD). The date on which a facility is available to serve the mission for which it is constructed.

BOD. Beneficial Occupancy Date.

BRAC. Base Realignment and Closure.

Branch Circuit. The circuit conductors between the final overcurrent device protecting the circuit and the outlets(s).

Btu. British Thermal Unit.

Btuh. British Thermal Unit per Hour.

Built-in Equipment. That equipment which is affixed to the facility and usually included in the construction contract.

Bulk Nitrous Oxide System. An assembly of equipment as described in the definition of bulk oxygen system that has a storage capacity of more than 3200 lb (1452 kg), approximately 28,000 cu ft (793 cu m) (NTP) of nitrous oxide.

Bulk Oxygen System. An assembly of equipment such as oxygen storage containers, pressure regulators, pressure relief devices, vaporizers, manifolds, and interconnecting piping that has a storage capacity of more than 20,000 cu ft (566 cu m) of oxygen (NTP) including unconnected reserves on hand at the site. The bulk oxygen system terminates at the point where oxygen at service pressure first enters the supply line. The oxygen containers may be stationary or movable, and the oxygen may be stored as gas or liquid.

BUMED. U.S. Navy Bureau of Medicine and Surgery.
http://navymedicine.med.navy.mil/

Business Occupancy. Business occupancies are those used for the transaction of business, for the keeping of accounts and records, and similar purposes. Doctors' offices, treatment and diagnostic facilities intended solely for outpatient care and physically separated from facilities for the treatment or care of inpatients, but otherwise associated with the management of an institution, may be classified as Business Occupancy.

C. Celsius.

Cardio. Has to do with the heart.

C-Arm. Term referring to a specific type of radiographic machine used for fluoroscopic examinations.

Cart (also called a "Module"). A wheeled vehicle upon which material is placed to transport it throughout the facility. Many cart variations are available. The movement of

carts can be accomplished by employees and/or semi-automated and/or automated transportation systems as determined by careful analysis for each individual hospital.

Cart Lift. A small vertical lift which is dedicated to the movement of carts. Cart lifts are usually automated and provide automatic dispatch and loading and unloading of carts. "Cart lifts" which are manually dispatched and require manual loading and unloading of carts are generally called cart dumbwaiters.

Cart Wash. The semi or fully automated machine that washes and rinses carts as required by the individual hospital's program. Units may provide automated or manual loading and unloading. Units may or may not provide a full drying capability. Selection of the correct unit(s) for an application should be made after a complete analysis of all requirements, including financial (LCC), traffic, etc. When the cart wash function is to be done manually, it is done by hose or steam gun in an equipment wash room or area.

Category Code. Term used to identify real property building types by function. Example: Medical and Dental Treatment Facilities (MTF's) fall into category code 500.

CATV. Cable Television system for entertainment purposes.

CBA. Cost Benefit Analysis.

CBRNE. Chemical/Biological/Radiological Nuclear and High Yield Explosive.

CCTV. Closed Circuit TV for security systems.

CDC. Center for Disease Control and Prevention. http://www.cdc.gov

CDR. Call Detail Recording—telephone system.

CD's. Contract Documents.

Central Material Service (CMS). The physical area and functional operation that is responsible for cleaning, sterilizing, preparing, packaging, storing and distribution of sterile items within the facility. CMS is the primary support element for the Operating suites and Labor and Delivery rooms.

Central Processing and Distribution CP&D. An all-inclusive term for that function in a hospital which encompasses those terms variously known as Central Supply, Central Nursing Supply, Central Sterile Supply, and Central Material Services. Generally refers to a materials handling methodology. Provides for the central management of all medical material required to support patient care activities. The heart of this concept is an automatic distribution system. CPD requires the standardization and centralization of the elements of storage and distribution.

CFA. Commission of Fine Arts. http://www.cfa.gov/

CFC. Chlorofluorocarbon.

CFR. Code of Federal Regulations. http://www.access.gpo.gov/nara/cfr/

CGA. Compressed Gas Association. http://www.cganet.com/

CHAMPUS. Civilian Health and Medical Program for the Uniformed Services. An indemnity-like program called TRICARE standard that is available as an option under DOD's TRICARE program. There are deductibles and cost shares for care delivered by civilian healthcare providers to active duty family members, retirees and their family members, certain survivors of deceased members and certain former spouses of members of the seven Uniformed Services of the United States.

CHCS. Composite Healthcare (Computer) Systems.

CID. Comprehensive Interior Design.

Clinic. A health treatment facility primarily intended and appropriately staffed and equipped to provide emergency treatment and ambulatory services. A clinic is also intended to perform certain non-therapeutic activities related to the health of the personnel served, such as physical examinations, immunizations, medical administration, preventive medicine services, and health promotion activities to support a primary military mission. In some instances, a clinic may also routinely provide therapeutic services to hospitalized patients to achieve rehabilitation goals; e.g., occupational therapy and physical therapy. A clinic may be equipped with bed for observation or patients awaiting transfer to a hospital, and for the care of cases that cannot be cared for on an outpatient status, but that do not require hospitalization. Such beds shall not be considered in calculating occupied-bed days by MTFs.

CMP. Construction Management Plan.

CMS. Central Material Service.

Code. A document containing only mandatory provisions using the word shall to indicate requirements and in a form generally suitable for adoption into law.

COE. U.S. Army Corps of Engineers, also shown as USACE .
http://www.usace.army.mil/

Cold Room. A refrigerated area large enough for personnel to enter.

Combustion Products. The gases, volatilized liquids and solids, particulate matter, and ash generated by combustion.

Commission of Fine Arts (CFA). A regulatory body in the U.S. National Capital Region (NCR) which helps determine applicability of all Federal MILCON funded facilities within the U.S. National Capital Region. [See National Capital Planning Commission (NCPC).]

Common Path of Travel. That portion of exit access that must be traversed before two separate and distinct paths of travel to two exits are available. Paths that merge are

common paths of travel. Common path of travel is measured in the same manner as travel distance but terminates at the point where two separate and distinct routes become available.

Compaction. A waste-handling methodology whereby the volume of waste materials is reduced for ease of disposal.

Composite Healthcare (Computer) Systems (CHCS). Successor of Tri-Service Medical Information Service (TRIMIS) which was a part of the “new- generation” design concept. The TRIMIS Program Office initiative to implement a standardized, Tri-service, integrated health care management information system throughout the three MILDEPS.

Concepts. The first phase of design which includes Block Plans (S1), Schematics (S2), Design Development (S3) and the final 35 percent submission (S4). The basis on which a Programmed Amount (PA) can be set for the Budget Submission. Approximately 35 percent of the design effort, as opposed to the second phase of design which is called the “working drawings” phase of design.

Conductive. Not only those materials, such as metals, that are commonly considered electrically conductible, but also that class of materials which have a resistance not exceeding 1,000,000 ohms. Such materials are required where electrostatic interconnection is necessary.

Constructability. An analytical study which reviews the methodology, ease (or difficulty) with which a project can be administered, bid, built, enforced, understood, and phased which determines degrees of difficulty and construction time required to build a Medical Treatment Facility. (See Section 2).

Construction Agent. The agency designated by the Secretary of Defense (SECDEF) responsible geographically (or by agreement) to erect, via contract, designs of Medical Treatment Facilities which have been coordinated by the Design Agents. Responsible for the project from Invitation for Bids (IFB) through Beneficial Occupancy (BOD) through the Warranty period(s). Current Construction Agents are:

a) The United States Army Corps of Engineers (USACE)
b) The Naval Facilities Engineering Command (NAVFAC)
c) The Air Force Engineers (AF/CECM) in the United Kingdom.

Construction Documents. All of the written, graphic and pictorial documents prepared or assembled for describing the design, location and physical characteristics of the elements of the project necessary for contractually obligating the work to a building contractor.

Construction Management Plan (CMP). Establishes processes and procedures for the execution of the construction contract.

Contingency Medical Treatment Facility (CMTF). An entity within the services’ wartime organization structure which provides medical care during the contingency, war, or national emergency. Contingency Medical Treatment Facilities include medical

treatment facilities afloat, deployable medical systems (DEPMEDS), and organizational medical assets.

Contract Documents (CD's). Those design drawings and specifications which, as a unit, constitute the basis for receiving bids and awarding a contract for construction. CD's are the basis on which a building is constructed.

CONUS. Continental United States.

Cost Benefit Analysis (CBA). The process of assessing all pertinent costs and benefits, usually performed in terms of an expected life-cycle of the system.

Court. An open, uncovered, unoccupied space, unobstructed to the sky, bounded on three or more sides by exterior building walls.

Court, Enclosed. A court bounded on all sides by the exterior walls of a building or exterior walls and lot lines on which walls are permitted.

CP&D. Central Processing and Distribution.

Criteria. Military UFCs, criteria manuals, guide specifications, definitive designs, using Military Department guidance, standard designs, and other related guidance published to promote quality facilities' engineering, design, construction, and maintenance.

Critical Branch. A subsystem of the emergency system consisting of feeders and branch circuits supplying energy to task illumination, special power circuits, and selected receptacles serving areas and functions related to patient care, and which can be connected to alternate power sources by one or more transfer switches during interruption of normal power source.

Critical Care Areas. See Section 9 for list of critical care areas.

Critical Equipment. That equipment essential to the safety of the occupants of the facility.

Critical Facility. Critical Facility provides selective protection for critical health care mission staffs and functions following catastrophic Chemical, Biological, Radiological, Nuclear and High Yield Explosive (CBRNE) attacks.

Critical Path. The linear path through a work schedule network determining the shortest time within which all work can be completed.

CRS. Corrosion-resistant steel.

Current Working Estimate (CWE). The current cost of the project including construction cost, contingency and SIOH. Required at certain levels of effort of design to compare against programmed amount (PA) to determine whether the project is executable given projected funds availability.

CWE. Current Working Estimate**.**

DA. Design Agent or Design Authorization.

Damage Risk Classification Categories (Seismic). Three seismic categories that attempt to relate the seriousness of the consequences of damage due to earthquake. The selection of a category may consider the density of human occupancy, the importance of the activity, or the value of the contents or structure itself. These categories are as follows: Basic Life Safety, High Risk Facility, and Essential Facility. (See Section 5).

DCA. Dental Compressed Air.

Dedicated Elevators or Lifts. A vertical transportation element that will be restricted in use to a singular predefined function (i.e.: clean surgical material only; soiled material only, etc.)

DEERS. Defense Enrollment Eligibility Reporting System. Automated system of verification of a person's eligibility to receive Uniformed Service benefits and privileges.

Defense Health Council (**DHC)**. Made up of using Military Department Surgeons General or their designated representatives to determine the validity and support of new medical technology, i.e., Hyperbaric Medicine, Magnetic Resonance Imaging (MRI), Positron Emission Technology (PET), Lithotripsy, etc. and which facility will receive the new technology.

Defense Logistics Agency (DLA). The agency of the DoD which, under its director, is responsible for the wholesale management, procurement, and distribution of items of supply common to the military departments.

Demand (or Unit) Delivery System. The methodology established for the movement of smaller supplies and, as applicable, messages, lab specimens, records, etc., that are not available from the user stocking/supply inventory or that has been depleted from same or occurs on a basis that is not routine or predictable.

Dental Clinic. A healthcare treatment facility appropriately staffed and equipped to provide outpatient dental care that may include a wide range of specialized and consultative support. Post graduate education in the arts and sciences of dentistry may be conducted in this facility based upon the requirements of each Service.

Dental Compressed Air (DCA). Compressed air system used for drying applications during dental procedures and as a power or drive source for lifts, locks and pneumatic dental instruments and equipment. Not used for breathing or respiratory support of any kind. (See Section 7).

Dental High Vacuum for oral evacuation (DHV). Dry vacuum system used to support patient care in dental treatment rooms and oral surgeries. (See Section 7).

Dental Low Vacuum for oral evacuation (DLV). Low vacuum, high volume, wet pipe system to provided scavenging, collection, and disposal of liquids, solids and aerosols from dental procedures. (See Section 7).

Departmental Gross Area. The functional space within a department plus intra-departmental circulation. Does not include "general" circulation.

Design Agent (DA). That agency, designated by the Secretary of Defense (SECDEF), responsible to design facilities in the Military Construction Program. Design Agents are responsible for the design of projects from receipt of a Design Authorization from TMA/PPMD through turning it over to the Construction Agents. Design Agents are:

a) The U.S. Army Corps of Engineers (USACE). The USACE Medical Facilities Office (MFO) is the primary USACE point of contact with OASD(HA).
b) The Naval Facilities Engineering Command (NAVFAC). The NAVFAC Medical Facilities Design Office (MFDO) is the primary NAVFAC point of contact with OASD(HA).
c) The Air Force Engineers (AF/CECM) in the United Kingdom. Air Force Civil Engineering Directorate of Engineering is the primary point of contact with OASD(HA).

Design Authorization (DA). The notice from TMP/PPMD to the Design Agents to proceed with A-E selection and design of a project to a designated level of effort. Usually designates project, project fiscal year, project location, programmed amount (PA), scope of the project (size in square feet), which meetings TMA/PPMD will attend, any deviations from the submittal requirements in this UFC, and whether or not TMA/PPMD wishes to participate in the A-E selection process.

Design Energy Target (DET). An energy-use performance target for a facility, not to include process loads. (See Section 6).

Design Energy Use (DEU). A calculation of the estimated energy consumption of a facility, not to include process loads. (See Section 6).

DET. Design Energy Target.

DEU. Design Energy Usage.

DHC. Defense Health Council.

DHV. Dental High Vacuum for oral evacuation.

Disabled Person. An individual who has a physical or mental condition which, to a material degree, limits, contributes to limiting or, if not corrected, will probably result in limiting the individual's performance or activities to the extend of constituting a substantial physical, mental, or vocational handicap.

DLV. Dental Low Vacuum for oral evacuation.

DoD Medical Space Planning Committee. A committee that is responsible for developing health facility sizing criteria and for programming policy recommendations. The panel includes representatives of the Surgeons General of the Military Departments, the ASD(HA), and the ASD(CFO).

Drug Dispensing. The issuance of one or more doses of prescribed medication in containers that are correctly labeled to indicate the name of the patient, the contents of the container, and all other vital information needed to facilitate correct patient usage and drug administration.

Dumbwaiter. A small vertical lift which is dedicated to the movement of carts, tote boxes and other similarly-sized items. Generally this term implies manual loading and unloading of the cargo.

EA. Economic Analysis.

Economic Analysis (EA). A cost benefit analysis done to identify the relative cost-effectiveness of delivering healthcare to a projected beneficiary population under different MTF sizing scenarios. PL 97-337 (15 October 1982), amending Section 1087 of Title 10, U.S.C., requires an Economic Analysis be done to determine the space to be programmed in MTFs for military retirees and their dependents.

EEG. Electroencephalogramy.

EIA. Electronic Industries Alliance. http://www.eia.org/

Electrical Life Support Equipment. Electrically powered equipment whose continuous operation is necessary to maintain a patient's life.

Elevator Population. The people (and other users) affecting the elevators in question.

EMCS. Energy Monitoring and Control System.

EMS. Emergency Medical Service.

EPA. Environmental Protection Agency. http://www.epa.gov/

EPABX. Electronic Private Automatic Branch Exchange—telephone switch.

Equipment Grounding Bus. A grounding terminal bus in the feeder circuit of the branch circuit distribution panel that serves a particular area.

Equipment System. A system of feeders and branch circuits arranged for automatic or manual connection to the alternate power source and which serves primarily three phase power equipment.

Equivalency. A method that can be used to assist the Authority Having Jurisdiction in determining equivalent compliance with various chapters of the Life Safety Code.

ESCS. Engineered Smoke Control System.

Essential Electrical System. A system comprised of alternate sources of power and all connected distribution systems and ancillary equipment, designed to assure continuity of electrical power to designated areas and functions of a health care facility during disruption of normal power sources and also designed to minimize disruption within the internal wiring system. The essential electrical system consists of the emergency system and the equipment system.

Essential Facilities (Seismic). A seismic damage risk classification category. Facilities in the category are necessary for post-disaster recovery and require continuous operation during and after an earthquake (See Section 5). Efforts to control damage due to earthquake in this category are the greatest.

Etiologic Waste. Any viable microorganism or its toxins which causes or may cause human disease.

ETO. Ethylene Oxide.

Evaluation. Implies an analysis to be performed by the designer (A-E) in the basic contract (as opposed to “studies” or “investigations”, which are extra services to be performed to complete the contract intent and requirements).

Evidence Based Design. The conscientious, explicit and judicious use of current best evidence in making planning and design decisions that advance the needs of patients, staff, families and organizations. (See Section 3).

Facilities. Building(s), equipment, and supplies necessary for the implementation of services by personnel.

Facility. A separate individual building, structure, utility system, or other item of real property improvement each item of which is subject to separate reporting and recording in accordance with DoD Instruction 4165.14, Real Property Reporting and Forecasting.

FAR. Federal Acquisitions Regulation. http://www.arnet.gov/far/

Federal Information Processing (**FIP)**. Any ADP equipment procured with federal government funds.

Feeder. All circuit conductors between the service equipment or the source of a separately derived system and the final branch-circuit overcurrent device.

FEMA. Federal Emergency Management Agency. http://www.fema.gov/

FEMP. Federal Energy Management Program. http://www.eere.energy.gov/femp/

Fenestration. The arrangement of windows in a building, their size, placing, style, etc.

FIP. Federal Information Processing.

Fire Exit Hardware. A door latch assembly incorporating a device that releases the latch upon application of force in the direction of egress travel and provides fire protection where used as part of the door assembly.

Fire Protection Engineer. A person, persons, or firm specializing in building fire protection design who (which) is qualified to interpret and design fire protection drawings and specifications in accordance with NFPA, JCAHO, UBC, and other regulatory requirements.

Fire Resistance Rating. The time, in minutes or hours, that materials or assemblies have withstood a fire exposure as established in accordance with the test procedures of NFPA 251, Standard Methods of Fire Tests of Building Construction and Materials.

Fire Watch. A person or persons assigned to an area for the purpose of protecting occupants from fire or similar emergencies.

Fire Window. A window assembly, including frame, glazing, and hardware that under NFPA 257, Standard for Fire Tests of Window Assemblies, meets the fire protective requirements for the location in which it is to be used.

Fixed. Fastened to walls, floors, or ceiling or to steam, gas, plumbing, electrical power, sensor lines in a permanent manner.

Flame Spread. The propagation of flame over a surface.

Flammable. An adjective describing easy ignition, intense burning, and rapid rate of flame spread during combustion. It may also be used as a noun to mean a flammable substance. Many substances nonflammable in air become flammable if the oxygen content of the gaseous medium is increased.

Flammable Anesthetics. Gases or vapors, such as fluroxene, cyclopropane, divinyl ether, ethyl chloride, ethyl ether, and ethylene, which may form flammable or explosive mixtures with air, oxygen, or reducing gases such as nitrous oxide.

Flammable Anesthetizing Location. Any area of a facility that has been designated to be used for the administration of any flammable inhalation anesthetic agents in the normal course of examination or treatment. DoD facilities do not use flammable anesthesia except in some training situations in major medical centers.

Flammable Gas. Any gas that will burn when mixed in any proportion with air, oxygen, or nitrous oxide.

Flammable Storage Cabinet. A cabinet for the storage of flammable and combustible liquids constructed in accordance with NFPA 30, Flammable and Combustible Liquids Code.

Flash Over. A stage in the development of a contained fire in which all of the exposed surfaces reach ignition temperatures more or less simultaneously and fire spreads rapidly throughout the space.

Flash Point. The minimum temperature at which a liquid gives off vapor in sufficient concentration to form an ignitable mixture with air near the surface of the liquid within the vessel as specified by appropriate test procedures and apparatus.

FLCM. Facilities Life Cycle Management.

Floor Area, Gross. Gross floor area shall be the total floor area within the building to include all rooms, mechanical rooms, hallways, stairs, closets, thickness of interior or exterior walls, columns, or other features. Where the term “area” is used, it shall be understood to be gross area unless otherwise specified. (See Section 2 and Figure 2-7 for expanded explanation.)

Floor Area, Net. Net floor area shall be the actual occupied area in a functional space, not including thickness of walls, chases, columns, or general circulation, etc. (See Section 2 and Figure 2-8 for expanded explanation.)

FM. Frequency Modulation—radio signal.

FSES. Fire Safety Evaluation System. In accordance with NFPA 101M.

FTE. Full-Time Equivalent

Fuel Load. The total quantity of combustible material of a building, space or fire area.

Full-Time Equivalent (FTE). Work force equivalent of one individual working full-time for a specific period which may be made up of several part-time individuals or one full-time individual.

Functional Requirements. Those requirements necessary to ensure a particular facility continually meets the objective of the function for which it was constructed.

GFCI. Ground-Fault Circuit Interrupter.

Glazing. Glass to be set as windows.

Governing Body. The individual, group, or agency that has ultimate authority and responsibility for the overall operation of the organization.

Grade. The degree or inclination of slope at ground level.

Gravity Chutes. Usually used for the vertical return of trash and linen (separate chutes) to a holding and collection room at the base of each chute.

Green Board. Moisture resistant gypsum board.

Ground-Fault Circuit Interrupter (GFCI). A device whose function is to interrupt the electric circuit to the load when a fault current to ground exceeds some predetermined value that is less than that required to operate the overcurrent protective device of the supply circuit.

Grounding System. A system of conductors that provides a low-impedance return path for leakage and fault currents. It coordinates with but may be locally more extensive than the grounding system described in Article 250 of NFPA 70, National Electrical Code.

GSF. Gross Square Feet.

GSM. Gross Square Meters.

Handling Capacity, Elevator. The “quantity” measure of elevator service is called handling capacity. Handling capacity is the number of persons and vehicles which can be transported by the elevator system in a given length of time. Average interval and handling capacity must be measured or calculated for the same designated time period to be meaningful.

Handrail. A bar, pipe, or similar member designed to furnish persons with a handhold. (A handrail, if of suitable design, may also serve as part of a guard.)

Hazardous Area in Laboratories. The area inside fume hoods or enclosures where tests or procedures are being conducted.

Hazardous Areas. Areas of structures, buildings, or parts thereof having a degree of hazard greater than that normal to the general occupancy of the building or structure, such as storage or use of combustibles or flammables, toxic, noxious, or corrosive materials, or use of heat-producing appliances.

Hazardous Location. A flammable anesthetizing location or any location where flammable agents are used or stored. See National Electric Code, Article 500.

Hazardous Waste. Waste which is 1) toxic, 2) infectious, 3) radioactive, 4) reactive, ignitable (spontaneously), or corrosive.

HDD. Heating Degree Days.

Health. A condition in which all functions of the body and mind are “normal” and active.

Health Care Facilities. Buildings or portions of buildings in which medical, dental, psychiatric, nursing, obstetrical, or surgical care is provided. Health care facilities include, but are not limited to, hospitals, nursing homes, limited care facilities, clinics, medical and dental offices, and ambulatory care centers, whether permanent or movable. (NFPA 99)

TMA/PPMD (Tricare Management Activity / Portfolio Planning and Management Division). (See Section 1.4.2).

Health Care Occupancies. Health care occupancies are those used for purposes such as medical or other treatment or care of persons suffering from physical or mental illness, disease or infirmity; and for the care of infants, convalescents, or infirm aged persons. An occupancy used in purposes of medical or other treatment or care of four or more persons where such occupants are mostly incapable of self-preservation due to age, physical or metal disability, or because of security measures not under the occupant's control.
Health care occupancies include:

a) Hospitals.
b) Nursing homes.
c) Limited care facilities.
d) Ambulatory health care centers.

Hematology. The science of the blood.

HEPA. High Efficiency Particulate Air.

High Efficiency Particulate Air Filter (HEPA). Replaceable filters having a minimum collective efficiency of 99.97 % for 0.3 micron particle. (See Appendix A.)

HHS. United States Department of Health and Human Services. http://www.hhs.gov

High Hazard Areas. Areas of structure, buildings, or parts thereof used for purposes that involve highly combustible, highly flammable, or explosive products or materials that are likely to burn with extreme rapidity, or that may produce poisonous fumes or gases, including highly toxic or noxious alkalis, acids, or other liquids or chemicals that involve flame, fume, explosive, poisonous, or irritant hazards; also uses that cause division of material into fine particles or dust subject to explosion or spontaneous combustion, and uses that constitute a high fire hazard because of the form, character, or volume of the material used.

High Rise Building. A building greater than 23 m (75 ft) in height where the building height is measured from the lowest level of fire department vehicle access to the floor of the highest occupiable story.

High Risk Facilities (Seismic). A seismic damage risk classification category. Facilities in this category are recognized as warranting a higher level of damage risk than the average building but less than for an essential facility. Efforts to control damage due to earthquake in this category are intermediate. (See Section 5).

Histology. Study of the microscopic structure of tissue.

Horizontal Exit. A way of passage from one building to an area of refuge in another building on approximately the same level, or a way of passage through or around a fire barrier at approximately the same level that affords safety from the fire and smoke originating from an area of incidence and areas communicating therewith.

Hospital. A health treatment facility capable of providing definitive inpatient care. It is staffed and equipped to provide diagnostic and therapeutic services in the fields of general medicine and surgery and preventative medicine services, and has the supporting facilities to perform its assigned mission and functions. A hospital may, in addition, discharge the functions of a clinic

Hospital Bed. A bed for an adult or child patient. Bassinets for newborns in maternity units, beds in labor rooms, recovery rooms, and other beds used exclusively for emergency purposes are not included in this definition.

HVAC. Heating, Ventilation, and Air-Conditioning.

HW. Hazardous Waste.

Hyperbaric. Pressures above atmospheric pressure.

Hypobaric. Pressures below atmospheric pressure.

IBS. Integrated Building System.

ICU. Intensive Care Unit.

IDS. Intrusion Detection System**.**

IES. Illuminating Engineering Society.

IFB. Invitation for Bids**.**

Illuminated, Externally. An illumination source contained outside the device that is to be illuminated.

Illuminated, Internally. An illumination source contained inside the device that is to be illuminated.

Incineration. In waste handling, the act of burning pathological and other designated waste/infectious waste in an incinerator in order to render the waste material(s) harmless.

Inspection. The process of reviewing work. The inspection shall be accomplished by a recognized and approved authority for the purpose of ascertaining approval and or acceptance of the work.

Inspection Certificate: An identification applied on a product by an approved agency containing the name of the manufacturer, the function and performance characteristics of the product, and the name and identification of an approved agency indicating that the product or material has been inspected and evaluated by an approved agency.

Integrated Building System (IBS). System involving coordinated design of all elements to achieve a building of optimum functionality, appearance, maintainability and adaptability. (See Appendix E).

Interdepartmental Circulation. General circulation. Circulation which provides access to and from various departments; includes elevators, stairs and major corridors.

Interface. 1) A common boundary between two systems or components. 2) A boundary detail designed to maintain a specified relation between adjacent systems or components.

Interstitial Space. Unfinished and unoccupied space between floors used for horizontal utility distribution systems, of sufficient size to accommodate workmen, and permit maintenance and alteration without interruption of activities on the floors. (See Appendix E.)

Intradepartmental Circulation. The area reserved for corridors and passages which are found immediately within the departmental area.

Invitation for Bids (IFB). That point in the design-construction process when all review comments from the 100% design submittal have been incorporated, the CWE is within the Project Amount, TMA/PPMD has notified the Design/Construction Agent that funds are available, and TMA/PPMD has notified the Design/Construction Agent to advertise the project for bids. It is generally that point in the process when the project ceases to be a design effort and becomes a “Construction Project”.

Isolated Power System. An archaic form of power system once used in flammable anesthetizing locations. Such systems are no longer required in DoD facilities.

Japanese Funded Improvement Program (JFIP).

JCAHO. Joint Commission on Accreditation of Healthcare Organizations. http://www.jcaho.org/

JCS. Joint Chiefs of Staff. That agency within the DoD which jointly controls coordinated war planning for the Military Departments.

JFIP. Japanese Funded Improvement Program.

Joint Commission on Accreditation of Healthcare Organizations (JCAHO). Private, not-for-profit organization composed of representatives of the American College of Surgeons, American College of Physicians, American Hospital Association, American Medical Association, and American Dental Association whose purpose is to establish standards for the operation of health facilities and services, conduct surveys, and determine accreditation status of medical treatment facilities.

JSIVA. Joint *Service*-Integrated Vulnerability Assessment or is it Joint *Staff*-Integrated Vulnerability Assessment?.

Joint Schedule Number (JSN). The number used to identify equipment on architectural drawings and plans supporting military construction projects.

JSN. Joint Schedule Number.

Kvp. Unit used to describe the radiation quality of x-rays. X-rays generated by electrons accelerated in a potential difference of for example 100kv are termed 100 kvp (kv peak voltage) x-rays.

LA. Laboratory Air.

Label. An identification applied on a product by the manufacturer or inspector which contains the name of the product, manufacturer, the function, and performance characteristics of the product or material, and the name and identification of an approved agency and which indicates that the representative sample of the product or material has been tested, evaluated and accepted in accordance with approved standards for the product or material.

Laboratory Air (LA). Compressed air system for use in medical or dental laboratories. May be combined with a dental compressed air (DCA) system. (See Section 7.)

Laboratory Work Area. A room or space for testing, analysis, research, instruction, or similar activities that involve the use of chemicals. This work area may or may not be enclosed.

LAN. Local Area Network.

LCCA. Life Cycle Cost Analysis.

LEED. Leadership in Energy and Environmental Design. A tool developed by the U.S. Green Building Council USGBC to help measure the sustainability of a project. (See Section 3)

Level of Exit Discharge. (1) The lowest story of a building from which not less than 50% of the required number of exits and not less than 50% of the required egress capacity of the story discharge directly outside at grade. (2) The story with the smallest elevation change needed to reach grade where no story has 50% or more of the required number of exits and 50% or more of the required egress capacity from such story discharge directly outside at grade.

Life-Cycle-Cost Analysis (LCCA). The determination, evaluation, and presentation of all costs incurred by and in a facility being engineered/designed. Includes costs of planning, designing, engineering, constructing, operating, and maintaining a component, system, or the facility.

Life Safety Branch. A subsystem of the emergency system consisting of feeders and branch circuit, meeting the requirements of Article 700 of NFPA 70, National Electrical Code, intended to provide adequate power needs to ensure safety to patients and

personnel, and which can be automatically connected to alternate power sources during interruption of the normal power source.

Life Safety Code (L.S.C.). Standard developed and updated regularly by the National Fire Protection Association that specifies construction and operational conditions to minimize fire hazards and provide a system of safety in case of fire.

Life Safety Code Upgrade. The term used when the primary purpose for a project at a facility is to compartmentalize, provide for egress, and generally bring the facility up to the L.S.C. standard for access and exiting requirements.

Life Safety and Utility Upgrade. This term is used when the facility requires a full NFPA modernization which is not limited to NFPA 30, 37, 70, 99, 101, and 110.

Load, Live. The weight superimposed by the use and occupancy of the building not including wind load, earthquake load, or dead load.

Local Area Network LAN. A modular communication methodology whereby the facility is prewired during construction for current and future communications (telephone, CHCS, etc.) needs without having to surface mount additional wires or coax in the future and reduce future communication installation costs.

Logistics Elevator. An elevator whose primary purpose is to transportation various supplies (dietary, medical/surgical supplies, etc., devices and equipment as well as occasional construction materials, etc.

Magnetic Resonance Imaging (MRI). A system that produces images of the body by using a strong magnetic field and computers. The imaging system is capable of showing the differences between gray and white matter in the brain and also is able to show other soft tissue structures that cannot be demonstrated with x-ray technologies.

ma. mili-ampere. The unit of electrical current flow equal to 0.001 ampere.

Material Handling (MH). The function of moving, packaging and storing of substances in any form. MH does not alter, change, enhance or add value to a product in any way. It is a “cost” function only which should be minimized to the greatest extent possible (within given aseptic, physical, operational and functional parameters).

Materials Management (MM). The general methodologies and organization responsible for all material and supply functions from the acquisition process through all other functions until final disposal or salvage. Organizationally the most efficient structure within most hospitals is the “centralized” one (see above). Various reporting structures can be established depending on the requirements and other pertinent factors at a specific institution.

May. “May” is used to indicate provisions which are used at the option of the designer.

MCA. Medical Compressed Air.

MDF. Main Distribution Frame for telephone system.

Means of Egress. A means of egress is a continuous and unobstructed way of exit travel from any point in a building or structure to a public way and consists of three separate and distinct parts:

a) The exit access.
b) The exit.
c) The exit discharge.

A means of egress comprises the vertical and horizontal travel and shall include intervening room spaces, doorways, hallways, corridors, passageways, balconies, ramps, stairs, elevators, enclosures, lobbies, escalators, horizontal exits, courts, and yards.

Mechanical Space. The area which houses the primary and intermediate components of the air conditioning, plumbing, communication, electrical and ventilation systems. This area includes chases and shafts as well as mechanical and electrical equipment rooms.

Medical and Dental Treatment Facility (MTF). A facility established for the purpose of furnishing medical and/or dental care to eligible individuals.

Medical Center. A large hospital that has been so designated and is appropriately staffed and equipped to provide a broad range of healthcare services. Serves as a referral center with specialized and consultative support for facilities within the geographic area of responsibility; conducts, as a minimum, a surgical graduate medical education program.

Medical Clinic. A freestanding healthcare treatment facility appropriately staffed and equipped to provide outpatient medical care that may include a wide range of clinical specialties.

Medical Compressed Air. MCA. Compressed air system used only for medical functions requiring breathable air to support respiration or for air-driven instruments that discharge into the pharynx. (See Section 7.)

Medical Military Construction Program (MILCON). That portion of the President's budget devoted exclusively to the renovation, upgrade, and replacement of Medical Treatment Facilities which costs more than $750,000. MILCON is not supposed to include Operations and Maintenance (O&M) or Repair and Maintenance (R&M) unless the area which could be done with O&M or R&M is affected by the larger MILCON project and must be accomplished to provide a complete and usable facility in accordance with NFPA and JCAHO requirements.

Medical-Surgical Vacuum System (MV). Dry vacuum system used only for medical functions involving patient care, therapy and diagnostic functions. May be used for DHV requirements in dental treatment rooms and oral surgeries. (See Section 7.)

Mezzanine. An intermediate level between the floor and the ceiling of any room or space.

MFDO. Medical Facilities Design Office.

MFRCL. Medical Facilities Room Contents List.

MH. Material Handling.

MHSS. Military Health Services System.

Migration. When more than one elevator group is available in a building, a passenger's origin does not necessarily dictate which elevator group will be used. A certain percentage of the population will migrate to other areas of a building to use an elevator for reasons such a meeting a friend or dropping off something on the way to their destination. This percentage is usually estimated to be 5-10% of the population (or as otherwise appropriate for the facility being studied).

MILCON. Military Construction Program.

Military Construction Programming. The annual processing, review, and approval of military construction project proposals by the Military Department Secretaries, the OSD, and the OMB for submission to the Congress.

MIPITS. Medical Inventory Portfolio Infrastructure Tracking System.

Mixed Occupancies. Sections of health care facilities may be classified as other occupancies if they meet all of the following conditions:

a) They are not intended to serve health care occupants for purposes of:
   1. Housing, or
   2. Treatment, or
   3. Customary access by patients incapable of self-preservation.

b) They are adequately separated from areas of health care occupancies by construction having a fire resistance rating of at least 2 hours.

MM. Materials Management.

Modernization. Alteration, repair, remodeling, replacement and renovation of existing buildings (including initial equipment thereof) and replacement of obsolete, built-in equipment of existing buildings. It does not include replacement of a facility or a portion to a capacity greater than the capacity of the existing facility.

Modular.
1) Having commensurable dimensions.
2) Capable of arrangement with exact fit in more than one sequence or direction.
3) Composed of/or containing predetermined dimensional and/or functional units such as repetitive structural bays or service modules.

MOU. Memorandum of Understanding.

MRI. Magnetic Resonance Imaging.

MTF. Medical and Dental Treatment Facility.

MTMC. Military Traffic Management Command.

Must. Indicates a mandatory requirement. Analogous to shall.

MV. Medical-Surgical Vacuum.

National Capital Planning Commission (NCPC). A regulatory body in the U.S. National Capital Region (NCR) which helps determines applicability of all Federal MILCON funded facilities within the U.S. National Capital Region. (See definition of Commission of Fine Arts and National Capital Region.)

National Fire Codes. Codes published by the National Fire Protection Association (NFPA).

National Stock Number (NSN). Medical equipment identification consisting of an applicable four-digit class code number plus the nine-digit national item identification number.

NATO. North Atlantic Treaty Organization.

NAVFAC. Naval Facilities Engineering Command. http://www.navfac.navy.mil/

NC-LEVEL. Noise Criteria-Level..

NCPC. National Capital Planning Commission. http://www.ncpc.gov/

NCR. National Capital Region.

NCRP. National Council of Radiation Protection and measurements.

NEMA. National Electrical Manufacturers Association. http://www.nema.org

NEPA. National Environmental Policy Act.

NFPA. National Fire Protection Agency. http://www.nfpa.org

NIOSH. National Institute for Occupational Safety and Health. http://www.cdc.gov/niosh/homepage.html

NIST. National Institute of Standards and Technology. http://www.nist.gov/

NO. Nitrous Oxide.

Noise Criteria-Level (**NC-LEVEL)**. Refers to a set of contours, roughly corresponding to the ear's response to Sound Pressure Level at various frequencies, which define the background sound level existing within a space.

Noncombustible Material. A material (as defined in NFPA 220, Standard on Types of Building Construction) that, in the form it is used and under the conditions anticipated, will not ignite, burn, support combustion, or release flammable vapors when subjected to fire or heat. Materials reported as noncombustible when tested in accordance with the Standard Test Method for Behavior of Materials in a Vertical Tube Furnace at 750 degrees C, ASTM E136, shall be considered noncombustible materials.

Nonflammable Anesthetic Agent. Refers to those inhalation agents that because of their vapor pressure at 98.6 degrees F (37 degrees C) and at atmospheric pressure cannot attain flammable concentrations when mixed with air, oxygen, or mixtures of oxygen and nitrous oxide.

Nonflammable Anesthetizing Location. Any anesthetizing location designated for the exclusive use of nonflammable anesthetizing agents.

Nonflammable Medical Gas System. A system of piped oxygen, nitrous oxide, compressed air, or other nonflammable medical gases.

Non-Regulated Medical Waste (NRMW). Waste not classified as RMW, recyclable materials or hazardous materials. Poses no special danger of infection or injury to personnel or the public.

Nosocomial. Pertaining to or originating in a hospital.

NSF. Net Square Feet.

NSM. Net Square Meters.

NSN. National Stock Number.

NRMW. Non-Regulated Medical Waste.

Nurses' Stations. Areas intended to provide a center of nursing activity for a group of nurses serving bed patients where the patient calls are received, nurses are dispatched, nurses' notes written, inpatient charts prepared, and medications prepared for distribution to patients. Where such activities are carried on in more than one location within a nursing unit, all such separate areas are considered a part of the nurses' station.

OASD(HA). Office of the Assistant Secretary of Defense (Health Affairs).

Occupancy. The purpose for which a building or portion thereof is used or intended to be used.

Occupant Load. The total number of persons that may occupy a building or portion thereof at any one time.

Occupiable Story. A story occupied by people on a regular basis. Stories used exclusively for mechanical equipment rooms, elevator penthouses, and similar spaces are not occupiable stories.

OCONUS. Outside the Continental United States.

OMB. Office of Management and Budget, Executive Office of the President.

O&M FUNDS. Operations and Maintenance Funds.

Operational Level Category (Seismic). These categories define the post-earthquake performance requirements for various facilities with respect to operational mission, disaster preparedness, and medical post-earthquake needs.

Operationally Ready Mode. A critical facility that completed its functional checks and determined to be capable of transforming to a higher level of preparedness. Ready for the next higher Operational Mode.

Operations and Maintenance Funds (O&M Funds). Those funds other than MILCON used for the express purpose of upgrading and maintaining existing facilities and equipment, or for the purchase of government furnished equipment and furnishings (not built-in) to provide a complete and usable facility at BOD.

OSHA. Occupational Safety and Health Administration. http://www.osha.gov

OX. Oxygen.

PA. Process Air or Programmed Amount**.**

Passenger Elevator. An elevator configured to move visitors, staff and other ambulatory pedestrian traffic between floors. This elevator is generally wide and shallow in configuration to facilitate the movement of pedestrians.

Patient Care Area. Any portion of a health care facility wherein patients are intended to be examined or treated.

Patient Service Elevator. An elevator configured to move patients on beds and gurneys, as well as patient care related equipment such as portable X-rays, inhalation equipment, empty gurneys, wheelchairs, etc. This elevator is generally narrow and deep to facilitate the loading and unloading of this traffic.

P&D Funds. Planning and Design Funds.

PEB's. Pre-Engineered Buildings.

Permanent. For the purposes of Medical MILCON construction, any structure designed for a useful life-span of 25 years or longer.

PET. Positron Emission Tomography.

PFD. Program for Design.

Planning and Design Funds (P&D Funds). Costs associated with preparation of design plans and specifications (AE and in-house design costs) and costs to develop OMSI products for a specific project.

Plumbing Fixture. Installed receptacles, devices or appliances which are supplied with water or which receive liquid or liquid borne wastes and discharge such wastes into drainage systems to which they may be directly or indirectly connected.

Pneumatic Tube System. A pneumatically powered small diameter tube (usually 4" or 6") that moves special carriers which contain messages, small supplies or other items that physically "fit" and can tolerate this method of transport. These systems can be point-to-point or multi-station in design.

POE. Post Occupancy Evaluation.

POM. Program Objective Memorandum.

Post Occupancy Evaluation (POE). An evaluation of the design and construction of a facility performed after BOD to obtain lessons-learned which can be applied to present and future designs and criteria.

Precious Metals Recovery Program. Promotes the economical recovery of precious metals from excess and surplus materials, and the use of recovered precious metals as Government Furnished Material.

Pre-Engineered Buildings (PEB's). For the purpose of these criteria, pre-engineered buildings shall be considered as those buildings in various configurations and sizes that are available from manufacturers as a standard item. This type of construction may be used for DoD medical and dental facilities where such use is indicated by life cycle cost to be economical, where they will meet the performance and functional requirements of the project and are architecturally compatible with the environment in which they will be erected. Because of the great variance in the quality and cost of such structures on the market, extreme care must be used in selection to ensure that the quality of the facility to be provided is commensurate with the project requirement and expected longevity of the mission to be served.

Prefabrication. The on-site or off-site advance manufacture of building systems and components traditionally fabricated in place during installation.

Process Air (PA). Compressed air system to support functions such as medical service columns or shop operations. (See Section 7.)

Program Amount (PA). The initial program amount is the estimated cost of a facility based on the DoD Cost Guidance and 1391 preparation prior to any design effort which establishes a project's viability in the budget cycle. Once Concept Design is completed the PA may be adjusted (up or down) based on the developed and validated CWE from the Design Agents. This PA (new) may be the amount sent to Congress and the basis of Final Contract Document Design phases through Invitation for Bid (IFB).

Program Objective Memorandum (POM). Formal document to identify major initiatives, their resource consumption estimates, and their operational justification used to prioritize and allocate manpower and fiscal resources.

Provider. Healthcare professional or facility or group of healthcare professionals or facilities that provide healthcare services to patients.

Public Way. A street, alley, or other similar parcel of land essentially open to the outside air deeded, dedicated, or otherwise permanently appropriated to the public for public use and having a clear width and height of not less than 3050 mm (120 in.).

Rad/Fluoro. Radiographic/Fluoroscopic.

Radio Frequency Interference (RFI).

Ramp. A ramp is a inclined floor surface or a surface in an accessible space that has a running slope greater than 1 in 20.

RCRA. Resource Conservation and Recovery Act 42 USC 6973.

Readiness, Military. The ability of forces, units, weapons systems, or equipment to perform as they were intended and to deploy and employ without unacceptable delays.

Request for Proposal (**RFP)**. A procurement document released to commercial industries outlining a requirement for development and/or implementation of a system or design. Industry provides its formal response in the form of proposed solutions to the problem defined, its cost and development schedules, and other pertinent data upon which the government selects a vendor(s) with whom to contract.

Respiratory Care Department/Service. An organizational unit of the hospital that is designed for the provision of ventilator support and associated services to patients.

RFI. Radio Frequency Interference.

RFP. Request for Proposal.

Risk. The possibility of suffering harm, disease, or loss. Risk Management. Function of planning, organizing, implementing, and directing a comprehensive program of activities to identify, evaluate, and take corrective action against risks that may lead to patient, visitor, or employee injury and property loss or damage with resulting financial loss or legal liability.

RMS. Root Mean Squared or Effective value. The value of alternating current or voltage equal to 0.707 times its peak value.

RMW. Regulated Medical Waste. Waste which poses danger of disease transmission and/or objectionable appearances to personnel and the public.

Schematic Design. Room-by-room scaled drawings defining the size and arrangement of areas in a building or building configuration as a basis for design development.

Section 2807, Title 10, U.S.C. The appropriate committees of Congress must be notified of the intent to award a contract for architectural and engineering services and construction design for the proposed military construction project if the estimated cost of such services exceeds $500,000. This notification must include the scope of the proposed project and the estimated cost of such services and must be made not less than 21 days before the initial obligation of funds for such services.

Semi-Permanent. For the purposes of medical MILCON construction, any structure designed to last between 5 and 25 years of useful life. An example is an overseas free-standing contingency facility off-base.

Service Elevator. An elevator that is “narrow and deep” in configuration to move patients and vehicular type traffic between floors.

Shall. Indicates a mandatory requirement, synonymous with “will.”

SHDA. Surgical Handpiece Drive Air.

Should. Indicated a recommendation or alternative that is highly advised but not absolutely required.

SID. Structural Interior Design. That portion of basic design services concerned with establishment of “motif,” color and finish selection usually very early in the Concept Design phase of all fixed, “structurally related” finishes, i.e., walls, floors, ceilings, columns, fixtures, casework, equipment, exteriors, etc. as opposed to comprehensive Interior Design (CID) which is an option to design services and relates to moveable, mobile, portable equipment, fixtures, furnishings, etc. For unity of color selection and design, both the SID and the CID must be compatible, conform to the finish schedule, and coordinate early and throughout the design, procurement, construction, and installation processes. (See Sections 2 and 3.)

Simulation. The use of a computer program as a model of a real situation.

SIOH. Supervision Inspection and Overhead.

Single-Loaded Corridor. A corridor with a single entry and exit point.

Smoke Barrier. A continuous membrane, or a membrane with discontinuities created by protected openings, where such membrane is designed and constructed to restrict the movement of smoke. The barrier might be vertically or horizontally aligned, such as

a wall, floor, or ceiling assembly. A smoke barrier might or might not have a fire resistance rating.

Smoke Compartment. A smoke compartment is a space within a building enclosed by smoke barriers on all sides including the top and bottom. In the provision of smoke compartments utilizing the outside walls or the roof of a building, it is not intended that outside walls, roofs or any opening therein be capable of resisting the passage of smoke.

Smoke Detector. A device that senses visible or invisible particles of combustion.

SOFA. Status of Forces Agreements.

Sound Transmission Class (STC). A single-number rating system which compares the Sound Transmission Loss of a test specimen with a standard contour.

SOW. Statement of Work or Scope of Work.

Sprinkler System.

Acceptance Test: All fire protection systems shall be tested in accordance with the requirements of applicable code in the presence of the appropriate Authority Having Jurisdiction. The Acceptance Test is the method employed to ensure and validate that the system has been tested in accordance with all applicable requirements.

Certification: The Authority Having Jurisdiction shall be responsible for confirming and certifying the appropriateness and acceptability of the constructed fire suppression system as installed.

Automatic: As applied to fire suppression devices, automatic refers to a device or system that provides an emergency function without the necessity of human intervention, and is activated as a result of a predetermined temperature rise, rate of temperature rise, or increase in the level of combustion products.

Automatic Fire Suppression System: An engineered system using carbon dioxide, foam, wet or dry chemicals, halogenated extinguishing agent, or an automatic sprinkler system to detect automatically and suppress a fire through fixed piping and nozzles.

Standby Mode. A critical facility capable of quickly and with minimum effort of transforming from its peacetime mode of operation to a higher level of preparedness. Ready for the next higher Operationally Ready Mode.

Statement of Work or Scope of Work (SOW). A formalized document describing the details of an effort to be accomplished through contracted resources.

State-of-the-Art. The scientific and technical level attained at a given time.

Station Outlet. An outlet point in a piped medical gas distribution system at which the user makes connections and disconnections.

Status of Forces Agreements (SOFA). Agreements between the United States government and the government of a foreign nation (host nation) which allows U.S.

Forces to engage in some activity (such as occupy, build, or otherwise have temporary rights) which otherwise would not be possible. SOFA agreements usually stipulate governing rules, codes and standards which must be followed in the course of construction on that nation's soil.

STC. Sound Transmission Class..

Sterilization. One of many methods of waste handling. Sterilization relates to rendering hazardous or infectious wastes harmless (i.e., free from living microorganisms, etc.) by antiseptic solution, heat, steam, and/or pressure.

Story. That portion of a building located between the upper surface of a floor and the upper surface of the floor or roof next above. Stories shall be counted starting at the primary level of exit discharge and ending at the highest occupiable level. For the purposes of this definition, the primary level of exit discharge of a building shall be that floor that is level with or above finished grade of this exterior wall line for 50 percent or more of its perimeter. All DoD facilities shall conform to this definition.

Street. *A public thoroughfare that has been dedicated for vehicular use by the public and can be used for access by fire department vehicles.* Enclosed spaces and tunnels, even though used for vehicular and pedestrian traffic, are not considered as streets for the purposes of this definition.

Street Floor. Any story or floor level accessible from the street or from outside the building at ground level, with floor level at main entrance not more than three risers above or below ground level and arranged and utilized as to qualify as the main floor. Where, due to differences in street levels, two or more stories are accessible from the street, each is a street floor for the purposes of this UFC. Where there is no floor level within the specified limits for a street floor above or below ground level, the building shall be considered as having no street floor.

Sustainable Design. Design, construction, operation and reuse/removal of the built environment in an environmentally and energy efficient manner.

System Analysis. Analysis of a sequence of activities or management operations to determine which activities or operations are necessary and how they can be accomplished.

Tactical (Operational) Mode. A critical facility, having completed its Operationally Ready functional checks, and activated its limited number of simple tasks during changeover, that is operating in an independent, sustained, continuous operation without resupply for a predetermined period of time. This is the highest level of preparedness or operation.

Task Illumination. Provisions for the minimum lighting required to carry out necessary tasks, including safe access to supplies and equipment and access to exits.

TDEU. Total Design Energy Usage

TIA. Telecommunications Industry Association. http://www.tiaonline.org/

Tricare Management Activity / Portfolio Planning and Management Division (TMA/PPMD). The Office of Primary Responsibility (OPR) for all DoD MILCON funded facilities. Organizationally the TMA/PPMD is a part of the Facilities Life Cycle Management under the Chief Financial Officer, Tricare Management Activity, Assistant Secretary of Defense for Health Affairs (OASD-HA).
http://www.tricare.osd.mil/ebc/rm_home/dmfo__home.cfm

TMA/RM. Tricare Management Activity/Resource Management Office.
http://www.tricare.osd.mil/ebc/rm_home/cfo_home.cfm

Total Building Commissioning. Commissioning is defined by the building industry as the process of verifying that all building systems perform interactively according to the design intent, and the systems meet the Owner's operational needs. (See Section 1.)

Total Design Energy Usage (TDEU). An estimate of the future energy consumption required to condition and operate a facility including process loads. Allows users to predict future energy demands and costs. (See Section 6.)

Total Gross Area. The total area including intra-departmental circulation, inter-departmental circulation, walls and structure, mechanical space, and total net area.

Triage. The evaluation and classification of casualties for purposes of treatment and evacuation. It consists of sorting patients according to type and seriousness of injury and the establishment of priority for treatment and evacuation.

TSRS. Telephone Station Requirement Schedule.

TX. Treatment.

UFAS. Uniform Federal Accessibility Standards**.**

UFC. Unified Facility Criteria.

UMCS. Utility Monitoring and Control Systems.

Uniform Federal Accessibility Standards (UFAS). Published as 49 CFR 31528 on August 7, 1984, the Department of Defense adopted the UFAS on May 8, 1985, and published the UFAS as FED STD 795 on April 1, 1988.

Uninterruptible Power Supply (UPS). A system of batteries and capacitance power storage devices to preclude catastrophic failure of critically important information processing systems. During an electrical power failure, it provides a continuous flow of power to a computer system for a specified period of time during which system operators may shut down a system without loss of information or loss of data base addressing structures.

Universal X-Ray Room. The universal x-ray room shall be capable of accepting all routine radiographic, fluoroscopic, and tomographic equipment up to 1200 ma, 150 kvp, regardless of manufacture, during initial installation and subsequent replacement actions with little, if any, facility modification. The procedures shall be performed unencumbered and without any restriction of system components, patient size, or any known procedure that any installed X-ray equipment can perform now or in the future. This definition does not apply to digital radiography, special procedure rooms, C-arms, or angiography rooms. (See Appendix C).

UPS. Uninterruptible Power Supply.

USA. Unites States Army.

USACE. United States Army Corps of Engineers.

USAF. United States Air Force.

USC. United States Code.

Using Military Department. Synonymous with using Service, i.e., the U.S. Army, Navy, or Air Force.

USMC. United States Marine Corps.

USN. United States Navy.

USPS. United States Postal Service.

Value Engineering (VE). Value engineering studies consist of analyses of certain high cost areas of a design to determine if an alternate way exists to achieve the same or improved function at a lower life cycle cost. The main objectives of VE studies are reduced life cycle cost and improved quality of design. The application of value engineering shall not result in a lowering of criteria, quality standards, or reduction of scope as established by the guidance in this document. (See Section 2).

VAV. Variable air volume.

VE. Value Engineering.

Vehicular Traffic. This traffic is generally defined as that traffic that is pushed, or rolled into elevators on wheels. Examples of vehicular traffic are beds and gurneys. Wheelchairs are considered vehicular traffic where they are pushed by an escort or attendant, and where the occupant is a patient. Where wheelchairs carry staff or visitors, they are generally counted in with the pedestrian population since they would utilize passenger elevators.

WAGD. Waste Anesthesia Gas Disposal.

WMC. Waste Management Center.

Working Drawings. The second phase of the Design process which includes the final development of all contract documents to prepare for the bidding phase.

WRM. War Reserve Material. That material required to augment peacetime assets to completely support forces, missions, and activities reflected in DoD/JCS war plans.

X-Ray Installations (Long-Time Rating). A rating based on an operating interval of 5 minutes or longer.

X-Ray Installations (Mobile). X-ray equipment mounted on a permanent base with wheels and/or casters for moving while completely assembled.

X-Ray Installations (Momentary Rating). A rating based on an operating interval that does not exceed 5 seconds.

X-Ray Installations (Portable). X-ray equipment designed to be hand carried.

X-Ray Installations (Transportable). X-ray equipment to be installed in a vehicle or that may be readily disassembled for transport in a vehicle.